| DESIGNED FOR USE WITH .141 S.R. | |
|---|---|
| CABLE ENTRY DIAMETER MINIMUM | |
| HOUSING | .143 |
| BUSHING | .1555 |

| REVISIONS | | | |
|---|---|---|---|
| REV | DESCRIPTION | DATE | APPROVED |
| 02 1 | REVISED | 3/27/96 | |

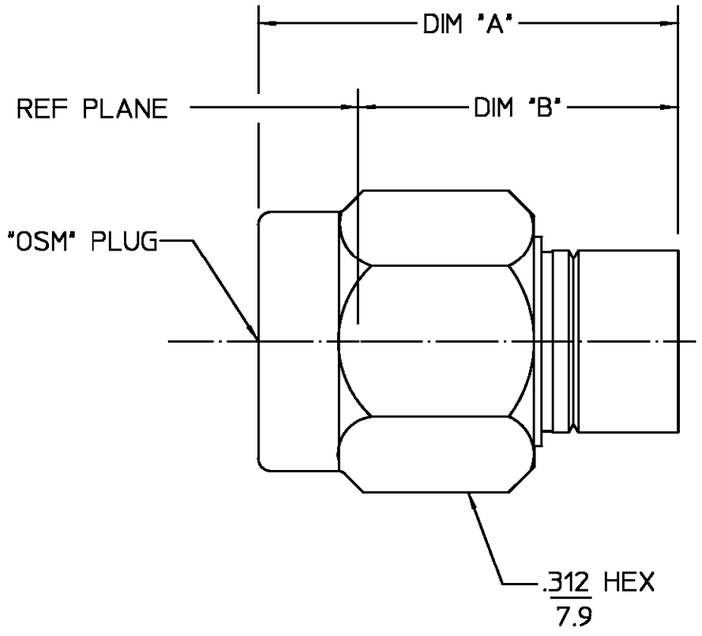


| | | |
|---|---|---|
| BEFORE CRIMPING | .502 REF<br>12.8 | .385 REF<br>9.8 |
| AFTER CRIMPING | .392 MAX<br>10.0 | .270 REF<br>6.9 |
| | DIM "A" | DIM "B" |

NOTES:
1. DESIGNED FOR USE WITH .141 DIA (RG 402/U) SEMI-RIGID CABLE
2. PICTORIAL VIEW IS AFTER CRIMPING
3. MIN STRAIGHT CABLE LENGTH: .287
4. IT IS SUGGESTED TO BEND CABLE PRIOR TO CRIMPING

.XXX = in
XX.X = mm (REF)

| COMPONENT | MATERIAL | FINISH |
|---|---|---|
| HOUSING<br>COUPLING NUT<br>BUSHING | STAINLESS STEEL PER ASTM-A484 AND ASTM-A582, TYPE 303 | PASSIVATE PER QQ-P-35 |
| GASKET | SILICONE RUBBER PER ZZ-R-765 | N/A |

UNLESS OTHERWISE SPECIFIED DIMENSIONS ARE IN INCHES
TOLERANCE ON
FRAC. ± 1/64 DEC. ±.005 ANGLES ± 1°

DRAWN BY R.GIERAS DATE 3/21/85
CHECKED BY R.GIERAS 3/21/85
APP'D BY R.GIERAS 3/21/85

These drawings and specifications are the property of M/A-COM Incorporated and shall not be reproduced or copied or used in whole or in part as the basis for the manufacture or sale of item(s) without written permission.

USE ASS'Y PROCEDURE
408-04664
(20-572)
NO. A.P.

AMP

AMP Incorporated
140 Fourth Avenue
Waltham, MA 02451-7599

TITLE "OSM" STRAIGHT CABLE PLUG SOLDERLESS COMPRESSION CRIMP ATTACHMENT M39012/92B3101

| SIZE | CODE IDENT NO. | | REV |
|---|---|---|---|
| B | 26805 | 2001-8931-92 | 02 1 |
| SCALE 6:1 | | | SHEET 1 OF 1 |

CUSTOMER DRAWING

AMP PART # 1050809-1
SHEET 1 OF 1 REV A