REV	
A	**DTM06-3S-E007**

REVISIONS			
SYM	DESCRIPTION	DATE	APPROVED
NC	NEW RELEASE PER E.O. P15425	10-21-97	RDR
A	REVISED & REDRAWN PER E.O. P21371	5-29-12	RDR

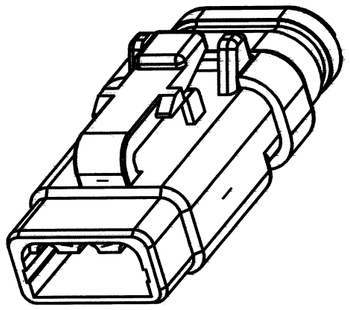

△7 SHRINK BOOT CAP

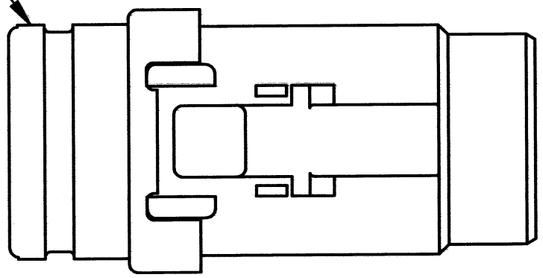

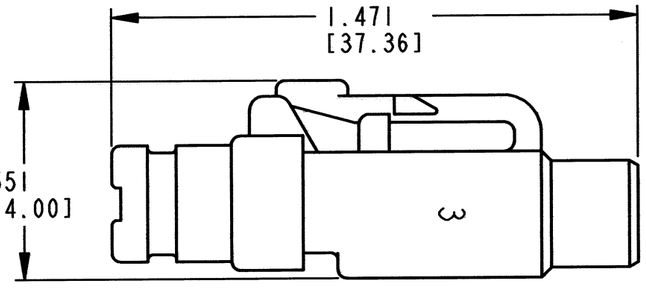

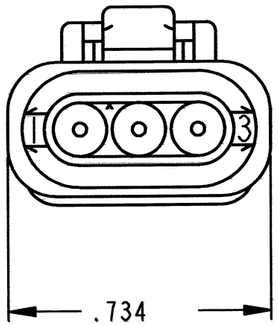

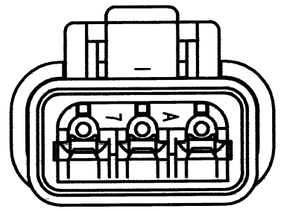

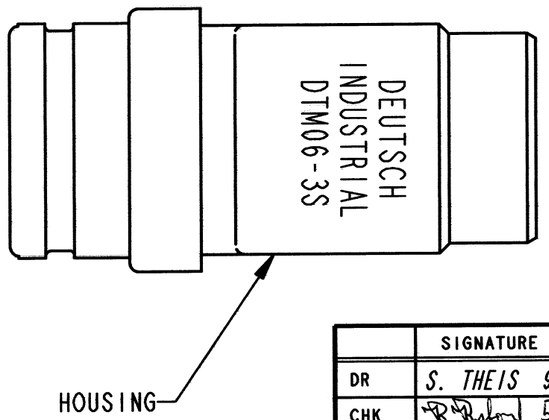

△7. PART MODIFICATION

6. MATERIAL - HOUSING/EXTENDED CAP: PLASTIC; GROMMET: RUBBER.

5. THIS PLUG MATES WITH DTM04-3P-**** RECEPTACLE. (**** = ALL MODIFICATIONS)

△4 FOR CONTACT AND WIRE PERFORMANCE AND APPLICATION CHARACTERISTICS SEE ENVELOPE DRAWING 0425-015-0000.

3. SECONDARY WEDGE LOCK SOLD SEPARATELY: WM-3S.

2. DIMENSION TOLERANCE: ±.025 [.64].

1. DIMENSIONS ARE IN INCHES [mm].

NOTES: UNLESS OTHERWISE SPECIFIED

CONTACT SIZE	MIN. INSUL O.D. [mm]	MAX. INSUL O.D. [mm]	WIRE RANGE △4 [mm^2] REF ONLY
20	.053 [1.35]	.120 [3.05]	16-22 AWG [1.0-0.5]

	SIGNATURE & DATE
DR	S. THEIS 9/16/97
CHK	B Boyford 5/24/2012
PE	R Milligan 5-22-12
APPD	S. Beem 5/23/12
SCALE NONE	WT

PLUG
3 SIZE #20 CONTACTS
-E007 MOD
DTM SERIES

ENVELOPE

EP — MATL. CODE

DEUTSCH INDUSTRIAL
3850 INDUSTRIAL AVE.
HEMET, CA 92545

B — DWG SIZE — **DTM06-3S-E007**

CODE 11139 — SHEET 1 OF 1