CUSTOMER DRAWING		
CATALOG # 6ESRFC3		
ECN#	APPRVD	DATE
10-006842	BG	31MAR10

SAFETY ORGANIZATIONS

THIS MODULE HAS BEEN FORMALLY RECOGNIZED, CERTIFIED OR APPROVED BY THE LISTED AGENCY. THEREFORE, ALL TEST/REQUIREMENTS SPECIFIED IN THE LATEST REVISION OF THE FOLLOWING AGENCY STANDARDS HAVE BEEN MET:

UL RECOGNIZED: UL 498
CSA CERTIFIED: CSA C22.2 No.42
VDE APPROVED: EN 60320-1

OPERATING SPECIFICATIONS

LINE CURRENT/VOLTAGE: 15 AMP, 250 VAC, UL, CSA
10 AMP, 250 VAC, VDE

LINE FREQUENCY: 50-60Hz

RELIABILITY SPECIFICATIONS:

STORAGE TEMPERATURE: -40°C TO +85°C
HUMIDITY: 21 DAYS @ 40°C 95% RH.
CURRENT OVERLOAD TEST: 6 TIMES I_r FOR 8 SECONDS

TEST SPECIFICATIONS:

L/G AND L/L I.R. @ 6000M (MIN.) 100VDC, 20°C AND 50% RH

RECOMMENDED RECEIVING INSPECTION HIPOT:

LINE TO GROUND: 1500 VAC FOR 1 MINUTE
LINE TO LINE: 1450 VDC FOR 1 MINUTE

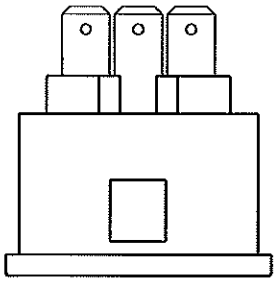

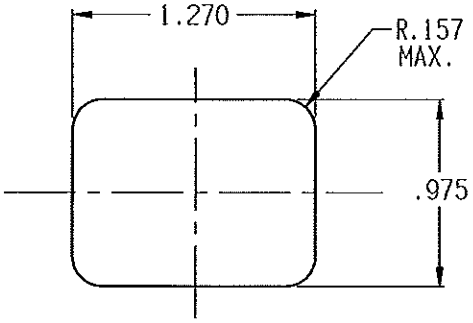

RECOMMENDED PANEL CUTOUT
0.059±.004 THICK

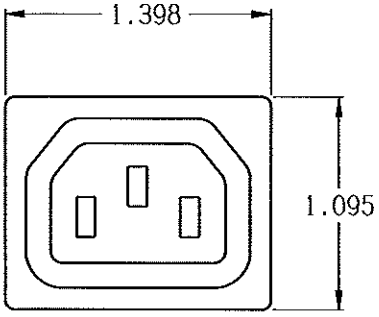

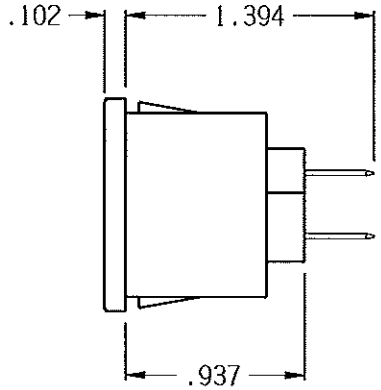

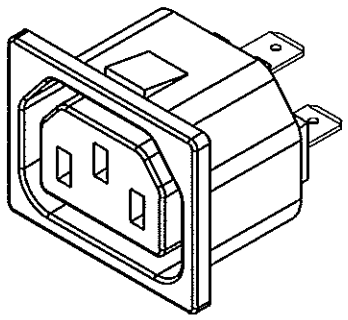

50Ω - 50Ω (MINIMUM) INSERTION LOSS												
FREQUENCY MHz	/	/	/	/	/	/	/	/	/	/	/	/
COMMON dB	/	/	/	/	/	/	/	/	/	/	/	/
DIFF. dB	/	/	/	/	/	/	/	/	/	/	/	/

PARTS SHALL COMPLY WITH TYCO ELECTRONICS 138-702 SPECIFICATION FOR HAZARDOUS SUBSTANCES

UNLESS OTHERWISE SPECIFIED
TOLERANCE TO BE ±0.025
MATERIAL & FINISH: AS SUPPLIED

NOTES:

Tyco Electronics
CORDSH PRODUCTS, 620 S. BUTTERFIELD RD. MUNDELEIN IL 60060

CUSTOMER DRAWING

TYCO ELECTRONICS PART NO. 1609133-2

SHEET SIZE	THIRD ANGLE PROJECTION	SCALE	DATE	DRAWING NUMBER	REV.
A		1:1	17FEB10	6ESRFC3	B
		DRV. BY: LJD	DRG: /		

THIS INFORMATION IS CONFIDENTIAL AND PROPRIETARY TO TYCO ELECTRONICS CORPORATION AND ITS WORLDWIDE SUBSIDIARIES AND AFFILIATES. IT MAY NOT BE DISCLOSED TO ANYONE OTHER THAN TYCO ELECTRONICS PERSONNEL, WITHOUT WRITTEN AUTHORIZATION FROM TYCO ELECTRONICS CORPORATION. HARRISBURG, PENNSYLVANIA USA.

6ESRFC3-B.ckd