REV	
A	HD10-9-96P*-B009

REVISIONS			
SYM	DESCRIPTION	DATE	APPROVED
NC	NEW RELEASE PER E.O. P17374	8/02/01	R.D.R.
A	REVISED PER E.O. P20769	1-25-11	RDR

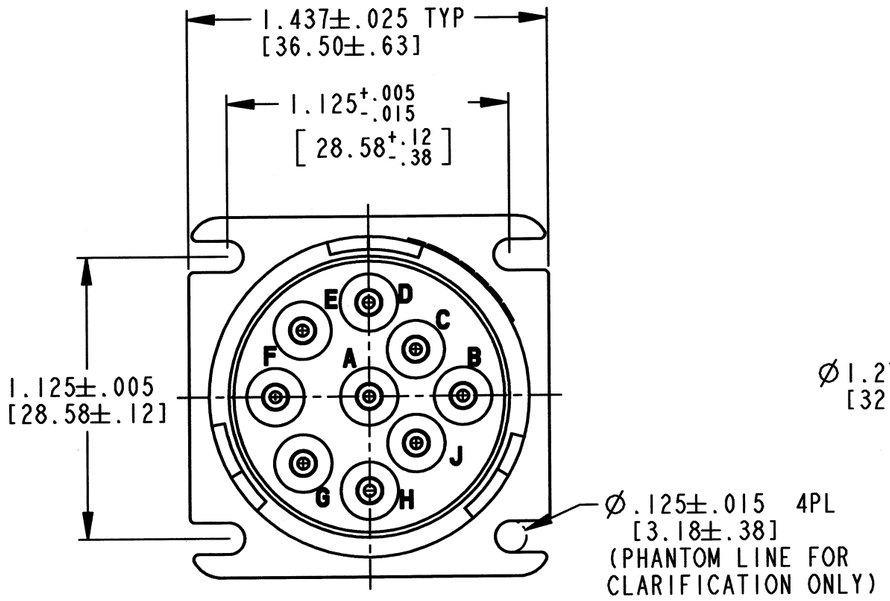

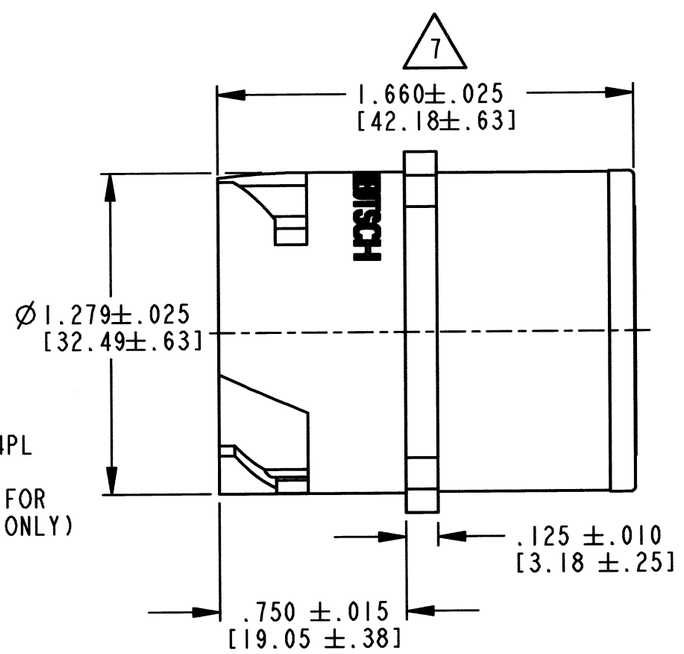

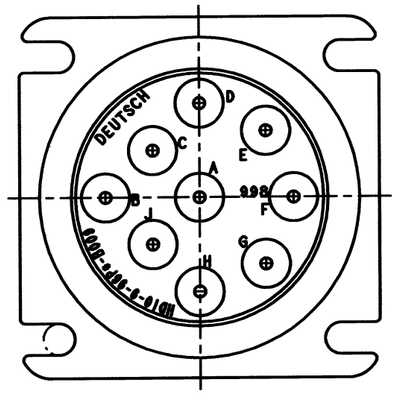

9. MATERIAL: SHELL: PLASTIC, SEAL: RUBBER.

8. WHEN *= E: IDENTIFIES 'E' WIRE SEAL.
WHEN *= BLANK: IDENTIFIES 'NORMAL' WIRE SEAL.

7. OVERALL DIMENSION DOES NOT INCLUDE RUBBER GROMMET.

6. THIS RECEPTACLE MATES WITH HD16-9-96S*-**** PLUG (*=SEAL TYPE, ****= ALL MODIFICATIONS).

5. FOR "PERFORMANCE AND APPLICATION CHARACTERISTICS OF SOLID/STAMPED AND FORMED CONTACTS AND WIRES" SEE ENVELOPE DRAWING 0425-015-0000 THIS RECEPTACLE USES PIN CONTACTS ONLY.

4. MAXIMUM PANEL THICKNESS IS .250 [6.35].

3. ALL DIMENSIONS ARE IN INCHES [MILLIMETERS].

2. THIS CONNECTOR SERIES WILL ACCOMMODATE THE FOLLOWING WIRE INSULATION DIAMETERS:

SEAL TYPE 8	CONTACT SIZE	MIN. INSUL. O.D.	MAX. INSUL. O.D.	WIRE RANGE [mm²] REF ONLY 5
NORMAL	16	.100 [2.54]	.150 [3.81]	14-20 AWG [2.0-.50]
E	16	.053 [1.35]	.120 [3.05]	14-20 AWG [2.0-.50]

NOTES: 1. CONSULT FACTORY FOR ELECTRICAL AND MATERIAL SPECIFICATIONS.



3-D VIEW

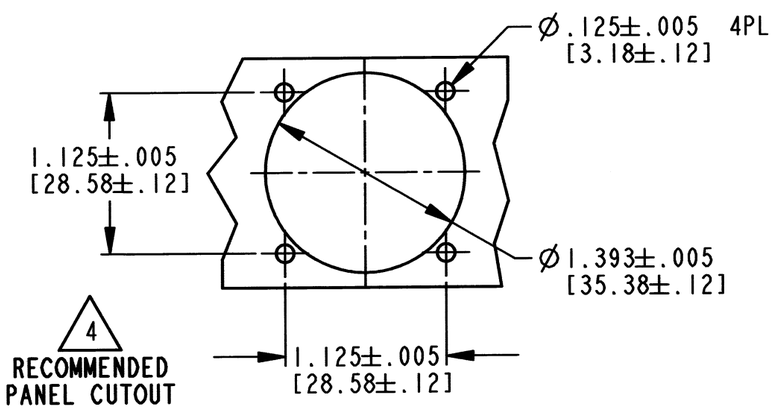

4 RECOMMENDED PANEL CUTOUT

	SIGNATURE & DATE
DR	X. SANCHEZ 7/30/01
CHK	S Beard 1/25/11
PE	[signature] 1/25/11
APPD	S Beard 1/25/11
SCALE NONE	WT ———

RECEPTACLE
SQUARE FLANGE
HD10 SERIES
ARR. 9-96
-B009 MOD.
COLOR: GREY
ENVELOPE

EP | MATL. CODE

DEUTSCH INDUSTRIAL
3850 INDUSTRIAL AVE.
HEMET, CA 92545

B | HD10-9-96P*-B009
DWG SIZE | CODE 11139 | SHEET 1 OF 1