N/C	GED00A**-**P*-366

REVISIONS			
REV	DESCRIPTION	DATE	APPROVED
N/C	NEW RELEASE PER E.O.A13567	7-29-94	RAS

E MAX	G THREAD MAJOR DIA	G THREAD TRUNCATED	WEIGHT MAX. LBS.	INSERT ARR	SHELL SIZE	SIMILAR TO	GE PART INDENT NO	CODE IDENT NO	DEUTSCH PART NO
.510	.557-.561	.562-24 UNEF-2A	.035	03PN	08	M83723/88	5088T80P01	11139	GED00A8-3PN-366
.635	.671-.676	.687-24 UNEF-2A	.055	05PN	10	M83723/88	5088T80P02	11139	GED00A10-5PN-366
.812	.857-.862	.875-20 UNEF-2A	.085	03PN	12	M83723/88	5088T80P03	11139	GED00A12-3PN-366
.812	.857-.862	.875-20 UNEF-2A	.085	12PN	12	M83723/88	5088T80P04	11139	GED00A12-12PN-366
.875	.919-.924	.937-20 UNEF-2A	.095	15PN	14	M83723/88	5088T80P05	11139	GED00A14-15PN-366
.933	1.043-1.048	1.062-18 UNEF-2A	.105	24PN	16	M83723/88	5088T80P06	11139	GED00A16-24PN-366
.993	1.043-1.048	1.062-18 UNEF-2A	.105	24P6	16	M83723/88	5088T80P07	11139	GED00A16-24P6-366
1.118	1.168-1.173	1.187-18 UNEF-2A	.130	31PN	18	M83723/88	5088T80P08	11139	GED00A18-31PN-366
1.368	1.418-1.423	1.437-18 UNEF-2A	.155	55PN	22	M83723/88	5088T80P09	11139	GED00A22-55PN-366
.875	.919-.924	.937-20 UNEF-2A	.095	07PN	14	M83723/88	5088T80P10	11139	GED00A14-7PN-366
.635	.671-.676	.687-24 UNEF-2A	.055	05P6	10	M83723/88	5088T80P11	11139	GED00A10-5P6-366
.635	.671-.676	.687-24 UNEF-2A	.055	05P7	10	M83723/88	5088T80P12	11139	GED00A10-5P7-366
.635	.671-.676	.687-24 UNEF-2A	.055	05P8	10	M83723/88	5088T80P13	11139	GED00A10-5P8-366
.812	.857-.862	.875-20 UNEF-2A	.085	03P6	12	M83723/88	5088T80P14	11139	GED00A12-3P6-366
.812	.857-.862	.875-20 UNEF-2A	.085	12P6	12	M83723/88	5088T80P15	11139	GED00A12-12P6-366
.812	.857-.862	.875-20 UNEF-2A	.085	12P9	12	M83723/88	5088T80P16	11139	GED00A12-12P9-366
.875	.919-.924	.937-20 UNEF-2A	.095	07P6	14	M83723/88	5088T80P17	11139	GED00A14-7P6-366

5. O-RING AND FACE SEAL TO BE IN ACCORDANCE WITH M50TF3564.
4. SHELL FINISH: ELECTRODEPOSITED NICKEL PER QQ-N-290, CLASS 2, .0001 TO .0002 THICK.
3. CONTACT FINISH: .00005 MIN. THICK GOLD PER MIL-G-45204 OVER .00005 MIN. THICK NICKEL PER QQ-N-290 AS MEASURED ON CONTACT ENGAGING SURFACES. PLATING SHALL MEET THE SOLDERABILITY REQUIREMENTS OF MIL-G-45204.
2. SHELL MATERIAL AMS 5647.
1. ALL DIMENSIONS ARE IN INCHES UNLESS OTHERWISE SPECIFIED.

NOTE:

	SIGNATURE & DATE
DR	M. HARDY 7/8/94
CHK	D. Erickson 7-29-94
PE	7/29/94
APPD	8-2-94
SCALE NONE	WT

RECEPTACLE, CONNECTOR

THREADED COUPLING
SQ. FLANGE MOUNT
HERMETIC (GLASS INSERT)
EYELET CONTACTS
NI PLATED SHELL
500°F

ENVELOPE

CP | MATL CODE

DEUTSCH
ENGINEERED CONNECTING DEVICES
Municipal Airport
Banning, California

B | GED00A**-**P*-366

DWG SIZE | CODE 11139 | SHEET 1 OF 2

N/C	GED00A**-**P*-366

REVISIONS			
REV	DESCRIPTION	DATE	APPROVED
N/C	NEW RELEASE PER E.O.A13567	7-29-94	RJE

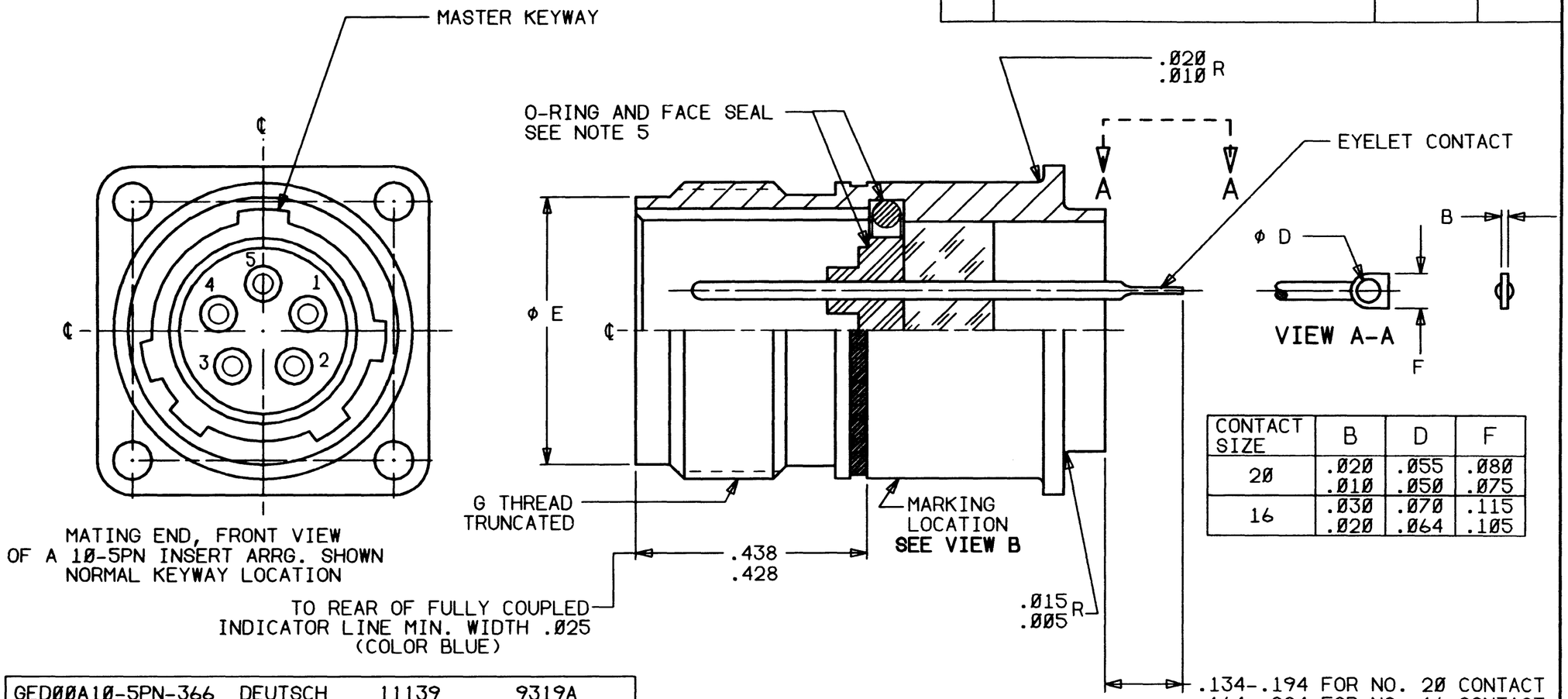

MATING END, FRONT VIEW
OF A 10-5PN INSERT ARRG. SHOWN
NORMAL KEYWAY LOCATION

CONTACT SIZE	B	D	F
20	.020 .010	.055 .050	.080 .075
16	.030 .020	.070 .064	.115 .105

GED00A10-5PN-366 DEUTSCH P/N
DEUTSCH OR SYMBOL
11139 CAGE CODE
9319A DATE CODE
SPACE

99207S0CN5088T80P01
GE PART NUMBER

VIEW B

	SIGNATURE & DATE
DR	M. HARDY 7/8/94
CHK	R.E. Erickson 7-29-94
PE	
APPD	8-2-94
SCALE NONE	WT

RECEPTACLE, CONNECTOR

THREADED COUPLING
SQ. FLANGE MOUNT
HERMETIC (GLASS INSERT)
EYELET CONTACTS
NI PLATED SHELL
500°F
ENVELOPE

CP | MATL CODE

DEUTSCH
ENGINEERED CONNECTING DEVICES
Municipal Airport
Banning, California

DWG SIZE		
B	GED00A**-**P*-366	
	CODE 11139	SHEET 2 OF 2