THIS DRAWING IS UNPUBLISHED. RELEASED FOR PUBLICATION 1997
© COPYRIGHT 1997 BY - ALL RIGHTS RESERVED.

REVISIONS

P	LTR	DESCRIPTION	DATE	DWN	APVD
	A3	Released as per ECR-08-011918	12.May.2008	SP	TS
	A4	REVISED PER ECR-16-016768	18AUG2017	AP	MKO
	A5	REVISED PER ECR-24-207461	06JUN2024	RK	WR
	A6	ECR-25-236400	02APR2025	SC	RB

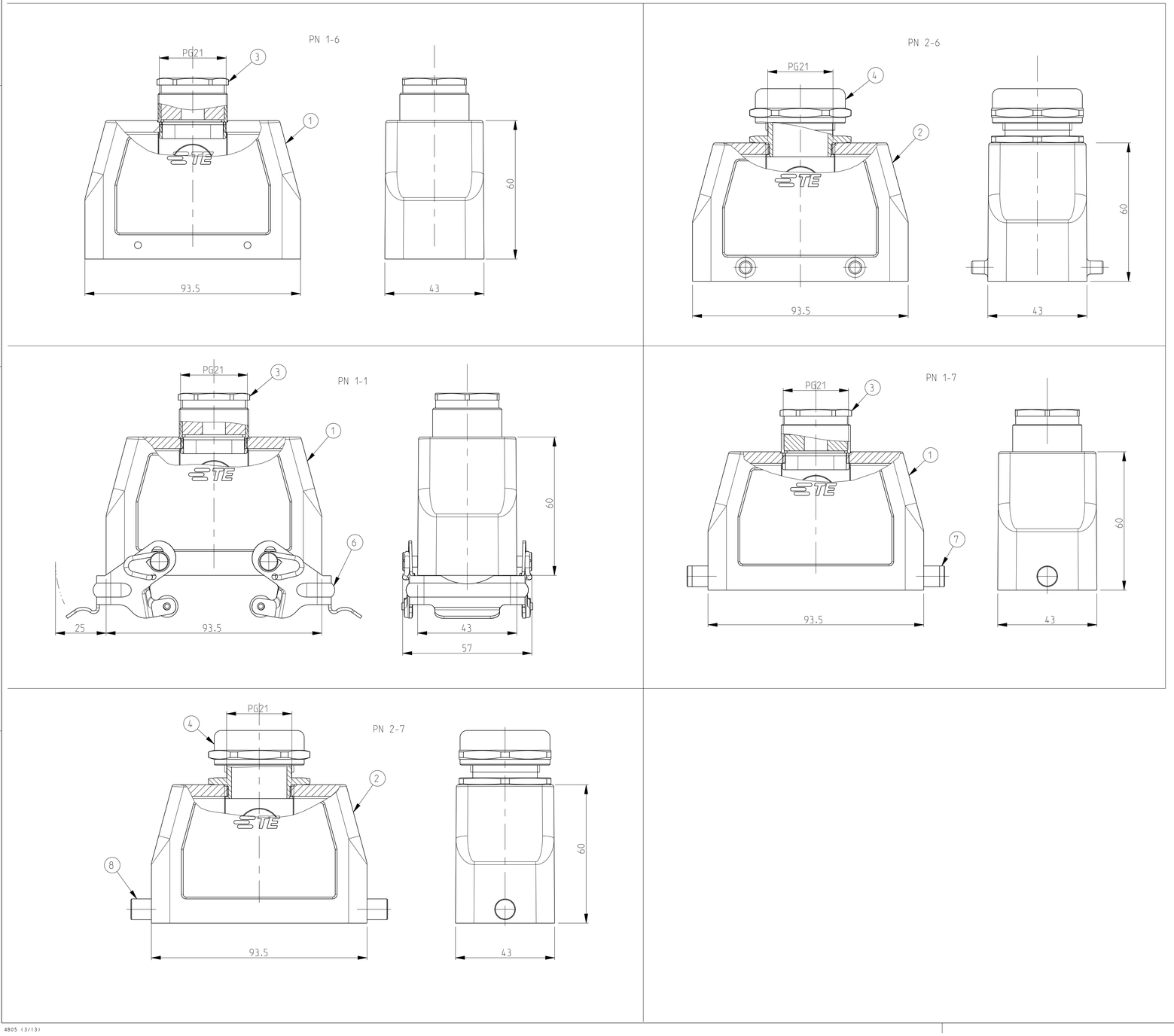

NOTES

1 Material: Housing: aluminium diecasting alloy
Seals: Neoprene

2 Surface:- Varnish grey
Aluminium oxide+Varnish Black

3 Varnish on the inside not necessary

4 Packaging
Packaging quantity 5 piece in a box

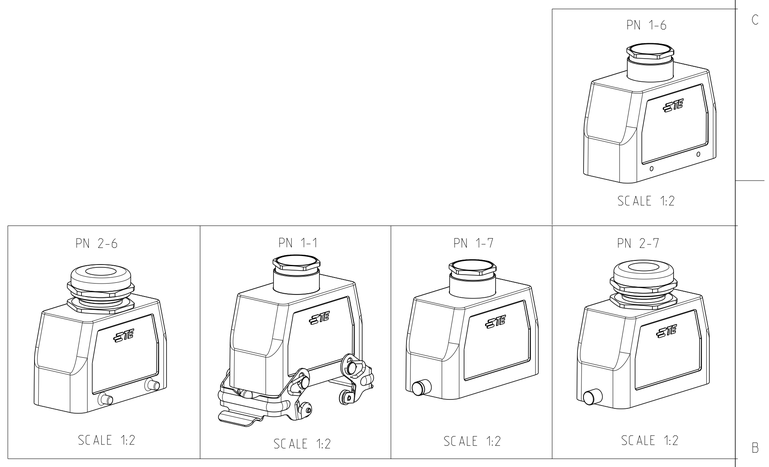

2-7	1-7	1-1	2-6	1-6	DESCRIPTION	MATERIAL	SURFACE	COLOR	ITEM NO	NOTES
OBSOLETE		OBSOLETE	OBSOLETE	OBSOLETE						
2					LB-Clip bolt	Stainless steel			8	
	2				LB-Clip bolt	Steel	Zinc plated	Blue	7	
		2			VS-Locking clip	Steel	Zinc plated	Blue	6	
					VS-Clip bolt	Stainless steel			5	
1			1		Gland fitting PG21	Brass	Zinc plated		4	
	1	1		1	Cable connection round PG21	Brass	Zinc plated		3	
1			1		Hood HB.16 Pg.1.21	Aluminium	Aluminium oxide	Black	2	
	1	1		1	Hood HB.16 Pg.1.21	Aluminium		Grey	1	

ORDERING TEXT
HB.16.STO.1.21
HB-K.16.STO.1.21
HB.16.STO-VS.1.21
HB.16.STO-GR.1.21
HB-K.16.STO-GR.1.21

THIS DRAWING IS A CONTROLLED DOCUMENT.

DIMENSIONS: mm

TOLERANCES UNLESS OTHERWISE SPECIFIED:
0 PLC ±
1 PLC ±
2 PLC ±
3 PLC ±
4 PLC ±
ANGLES ±

MATERIAL

FINISH

DWN Schneider 14.01.03
CHK Schweiger 14.01.03
APVD -
PRODUCT SPEC 108-74001 108-74003
APPLICATION SPEC 114-74001 114-74004
WEIGHT

TE Connectivity

NAME Hood HB.16.STO

SIZE A1 | CAGE CODE 00779 | DRAWING NO C-1102293 | RESTRICTED TO

CUSTOMER DRAWING | SCALE 1:1 | SHEET 1 OF 1 | REV A6

4805 (3/13)