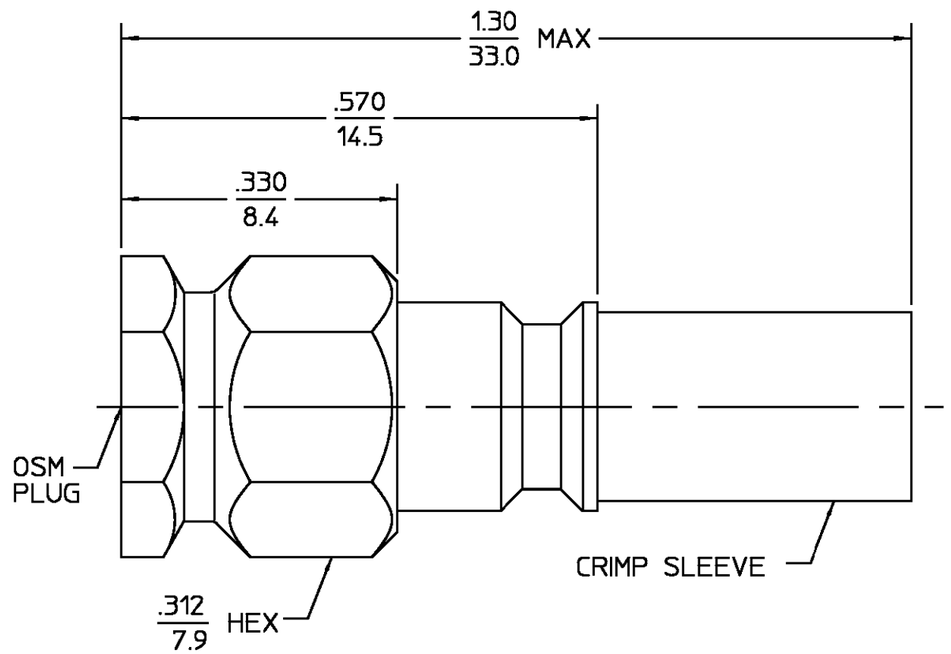

DESIGNED FOR USE WITH RG141/U OR EQUIVALENT	
CABLE ENTRY DIAMETER MINIMUM	
CONTACT	.040
HOUSING	.121
FERRULE	.205

REVISIONS			
REV	DESCRIPTION	DATE	APPROVED
01_0	RELEASED	6/1/95	

COMPONENT	MATERIAL	FINISH
COUPLING NUT HOUSING	STAINLESS STEEL PER ASTM-A484 AND ASTM-A582, TYPE 303	PASSIVATE PER ASTM-A380
DIELECTRIC	TFE FLUOROCARBON PER ASTM-D-1457	N/A
CENTER CONTACT	BERYLLIUM COPPER PER ASTM B 196, ALLOY C17300, CONDITION H	GOLD PLATE PER MIL-G-45204
RETAINING RING	BERYLLIUM COPPER PER ASTM B 194, ALLOY C17200, CONDITION H	N/A
GASKET	SILICONE RUBBER PER ZZ-R-765	N/A
FERRULE	COPPER OR BRASS ALLOY ROCKWELL F65 MAXIMUM	GOLD PLATE PER MIL-G-45204

ELECTRICAL	MECHANICAL	ENVIRONMENTAL
Nominal Impedance (Ohms) 50	Interface Dimensions MIL-STD-348A, Fig. 310.1	Temperature Rating -65°C to +165°C
Frequency Range (GHz) DC to 12.4	Recommended Mating Torque 7 - 10 in-lbs	Vibration MIL-STD-202, Method 204, Condition D.
Volt Rating (VRMS MAX) @ Sea Level 335	Mating Characteristics: Insertion (MAX Lbs) N/A	Shock MIL-STD-202, Method 213, Condition I.
VSWR 1.15 + .01 f(GHz)	Withdrawal (MIN Oz) N/A	Thermal Shock MIL-STD-202, Method 107, Condition B, Except High Temp +200°C
Insertion Loss (dB MAX) $.06\sqrt{f(GHz)}$	Force to Engage and Disengage (In-Lbs MAX) 2.0	Moisture Resistance MIL-STD-202, Method 106
RF Leakage (dB MIN) -60 @ 2-3 GHz	Center Contact Captivation Axial (Lbs) 6.0	Corrosion - MIL-STD-202, Method 101, Condition B, 5% salt spray
Corona, 70,000 Ft (VRMS MIN) 250	Radial (In-Oz) N/A	
Dielectric Withstanding Voltage (VRMS MIN) @ Sea Level 1,000	Cable Retention Axial Force (Lbs MIN) 40	
Contact Resistance (Milliohms MAX) Center Contact 3.0	Torque (In-Oz) N/A	
Outer Contact 2.0	Weight (Grams) TBD	
Cable to Housing 0.5		
RF High Potential @ Sea Level (VRMS MIN @ 5 MHz) 670		
I.R.(Megohms MIN) 5,000		

.XXX = in
XX.X = mm

UNLESS OTHERWISE SPECIFIED DIMENSIONS ARE IN INCHES
TOLERANCE ON
FRAC. ± 1/64 DEC. ±.005 ANGLES ± 1°

DRAWN BY [signature] DATE 6/1/95
CHECKED BY
APP'D BY [signature] 6/1/95

These drawings and specifications are the property of Omni Spectra Incorporated and shall not be reproduced or copied or used in whole or in part as the basis for the manufacture or sale of item(s) without written permission.

USE ASS'Y PROCEDURE

NO. A.P. 408-04935 (20-514)

AMP Incorporated
140 Fourth Avenue
Waltham, MA 02451-7599

TITLE OSM STRAIGHT CABLE PLUG CRIMP ATTACHMENT M39012/55-3029 CAT. C

SIZE	CODE IDENT NO.		REV
B	26805	2031-8029-92	01_0
SCALE 10 : 1			SHEET 1 OF 1

CUSTOMER DRAWING

AMP PART # 1051787-1
SHEET 1 OF 1 REV A