THIS DRAWING IS UNPUBLISHED. RELEASED FOR PUBLICATION 20
© COPYRIGHT 20 TE CONNECTIVITY ALL RIGHTS RESERVED.

| LOC | DIST |
|---|---|
| AP | - |

REVISIONS

| P | LTR | DESCRIPTION | DATE | DWN | APVD |
|---|---|---|---|---|---|
| | C | REVISED PER ECN 23-193366 | 10JAN2023 | WLS | BHC |
| | C1 | REVISED PER ECN-24-266312 | 15MAY2024 | WLS | JS |
| | C2 | REVISED PER ECR-25-259617 | 17OCT2025 | MS | LW |
| | | | | | |

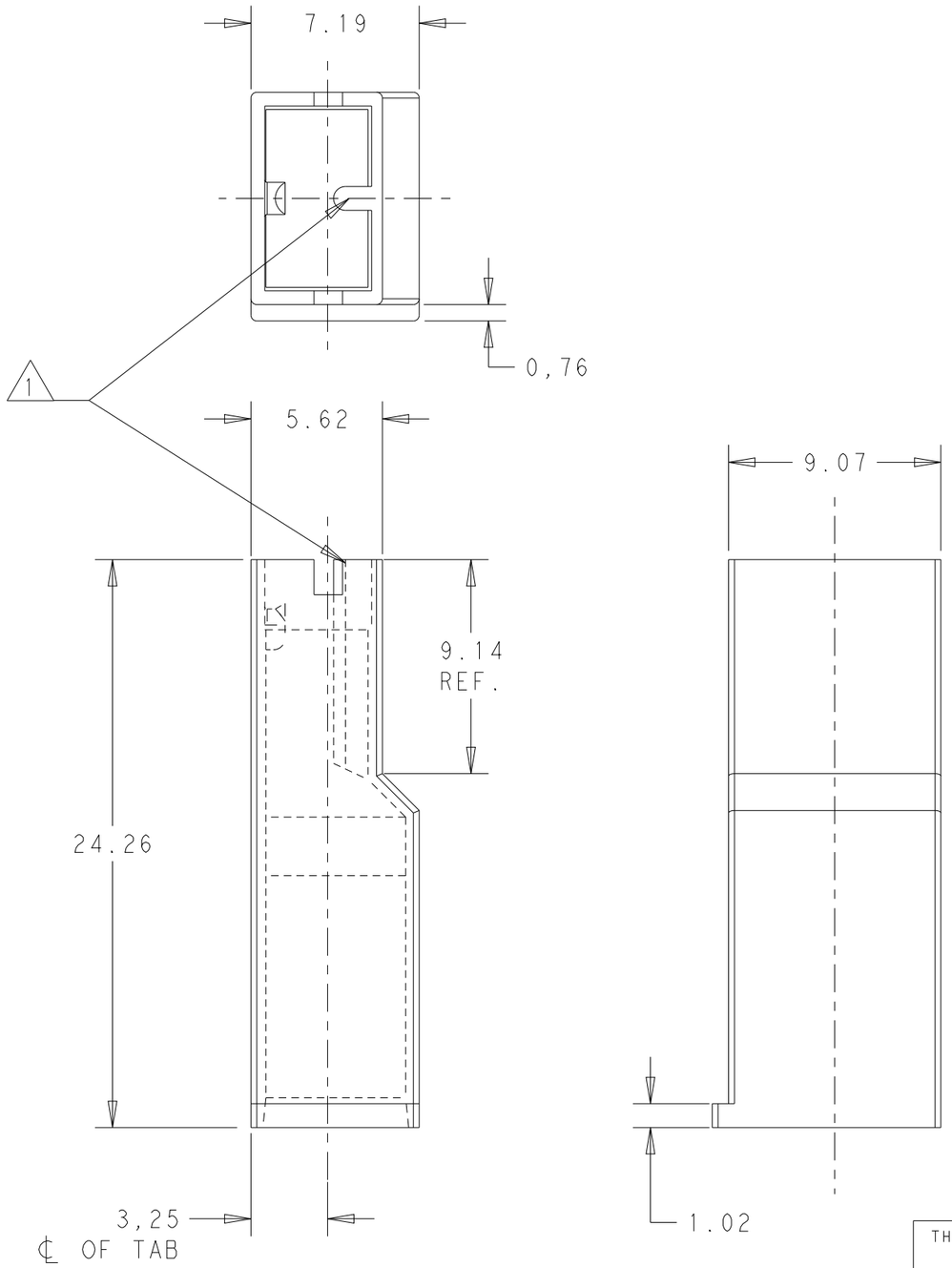


1 RIB MAY EXTEND TO FRONT OF HOUSING.

2 MATERIAL: PA 66 ACC. TO SPEC. IEC 60335 GWT 850°C - WITHOUT FLAME.

3 HEAT STABILIZED

| COLOR | MATERIAL | PART NUMBER |
|---|---|---|
| BLACK | PA 6.6 - HB 3 | 1-2133341-3 |
| NATURAL | PA 6.6 - UL94 - V0 - GWT 2 | 1-2133341-2 |
| NATURAL | PA 6.6 - UL94 - V0 | 1-2133341-1 |
| OBSOLETE ~~BLUE~~ | PA 6.6 - UL94 - V2 | ~~2133341-6~~ |
| GREEN | | 2133341-5 |
| OBSOLETE ~~YELLOW~~ | | ~~2133341-4~~ |
| OBSOLETE ~~RED~~ | | ~~2133341-3~~ |
| OBSOLETE ~~NATURAL~~ | | ~~2133341-2~~ |
| OBSOLETE ~~BLACK~~ | | ~~2133341-1~~ |

THIS DRAWING IS A CONTROLLED DOCUMENT.

DIMENSIONS: mm

TOLERANCES UNLESS OTHERWISE SPECIFIED:

| | |
|---|---|
| 0 PLC | ±- |
| 1 PLC | ±0,5 |
| 2 PLC | ±0,5 |
| 3 PLC | ±- |
| 4 PLC | ±- |
| ANGLES | ±- |

MATERIAL SEE TABLE

FINISH -

DWN H.C.CANTERI 25MAY2011

CHK W.L.STEFANI 25MAY2011

APVD -

PRODUCT SPEC 108-3252

APPLICATION SPEC 114-2153

WEIGHT -

TE Connectivity

NAME MKI .250 POSITIVE LOCK RECEPTACLE INSULATOR MKI .250 POSITIVE LOCK

| SIZE | CAGE CODE | DRAWING NO | RESTRICTED TO |
|---|---|---|---|
| A3 | 00779 | C-2133341 | - |

CUSTOMER DRAWING

SCALE 4:1 SHEET 1 OF 1 REV C2