THIS DRAWING IS A CONTROLLED DOCUMENT FOR TYCO ELECTRONICS CORPORATION
IT IS SUBJECT TO CHANGE AND THE CONTROLLING ENGINEERING ORGANIZATION
SHOULD BE CONTACTED FOR THE LATEST REVISION.

LOC	DIST
E	B

REVISIONS

P	LTR	DESCRIPTION	DATE	DWN	APVD
	BC	NEW RELEASE	02NOV2010	PT	St.P

FOR FURTHER INFORMATION SEE DATA SHEET FOR
RN73 SERIES-HIGH PRECISION RESISTORS (SMD)

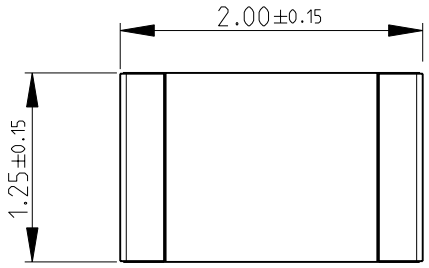

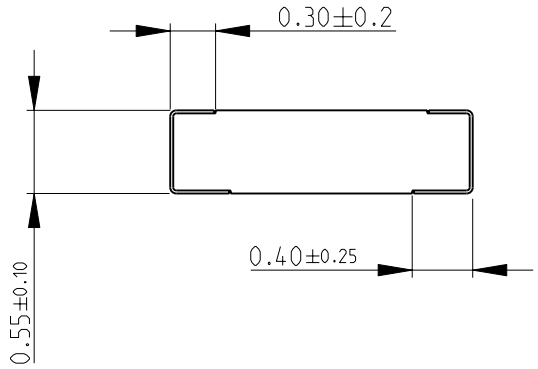

RECOMMENDED LAND PATTERN

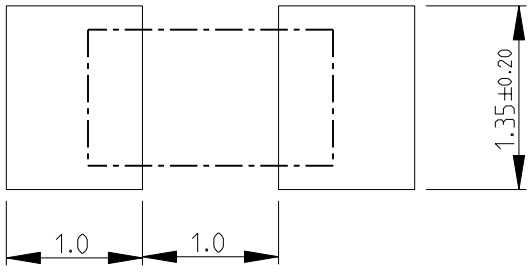

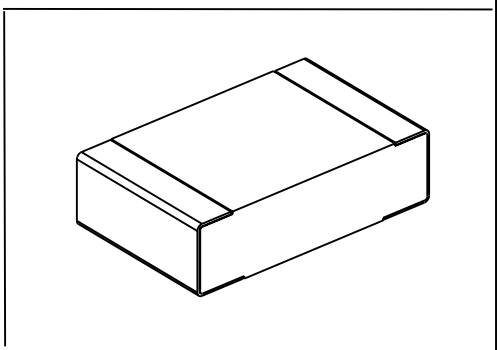

THIS DRAWING IS UNPUBLISHED. RELEASED FOR PUBLICATION 2010
© COPYRIGHT2010 BY TYCO ELECTRONICS CORPORATION. ALL RIGHTS RESERVED.

DIMENSIONS: mm

TOLERANCES UNLESS OTHERWISE SPECIFIED:

0 PLC	±0.2
1 PLC	±0.1
2 PLC	±-
3 PLC	±-
4 PLC	±-
ANGLES	±5°

DWN	PARUSURAM.T	02NOV2010
CHK	ALLAN.P	02NOV2010
APVD	STEPHEN.P	02NOV2010
PRODUCT SPEC	-	
APPLICATION SPEC	-	
WEIGHT	-	

MATERIAL: -
FINISH: -

Tyco Electronics
Tyco Electronics Corporation
Dorcan, Swindon, SN3 5HH

NAME: HIGH PRECISION RESISTORS (SMD)
SERIES RN73 2A

SIZE	CAGE CODE	DRAWING NO	RESTRICTED TO
A4	00779	C-1676176	-

CUSTOMER DRAWING

SCALE 20:1 SHEET 1 OF 1 REV BC

AMP 1469-35 REV 31MAR2000

Pro/ENGINEER DRAWING