REV	
F	HDBOX-24-91PN

REVISIONS			
SYM	DESCRIPTION	DATE	APPROVED
C	REVISED PER E.O. P16452	4/18/00	C.WOODRUFF
D	REVISED PER E.O. P17957	11/22/02	R.D.R.
E	REVISED PER E.O. P18414	12/16/03	R.D.R.
F	REVISED PER E.O. P19594	7-30-07	RDR

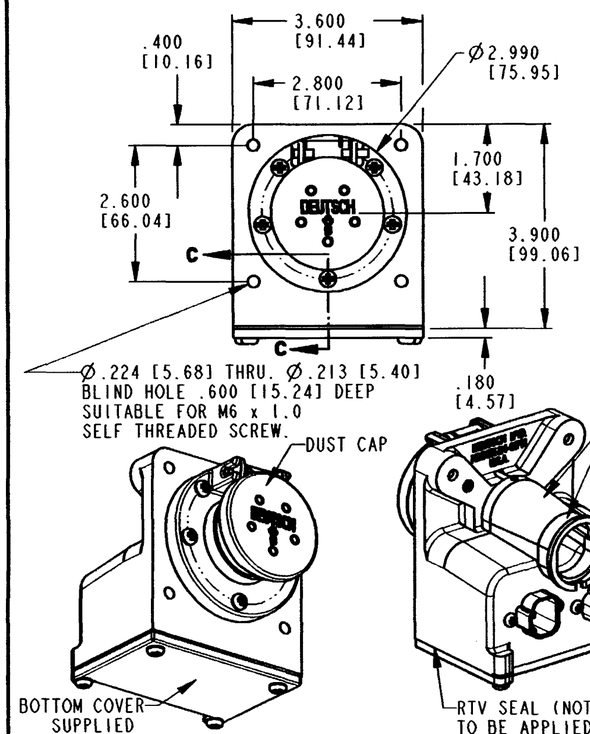

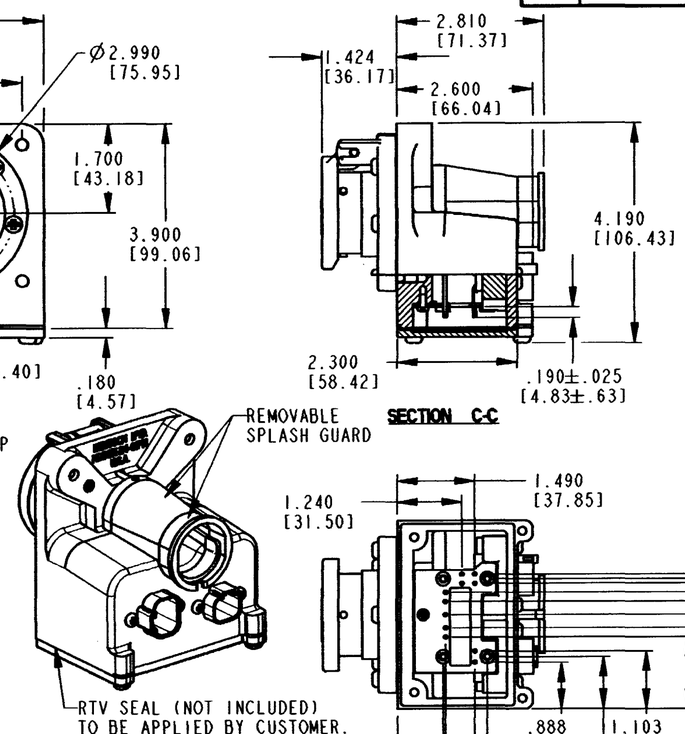

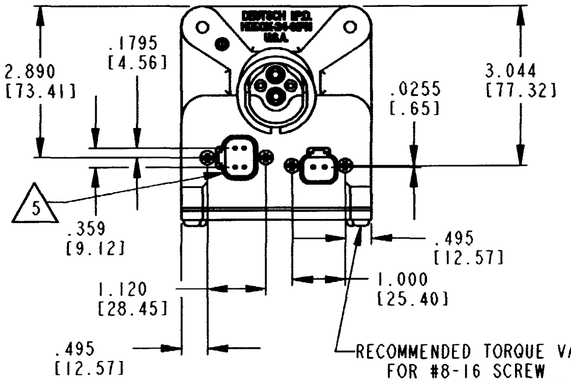

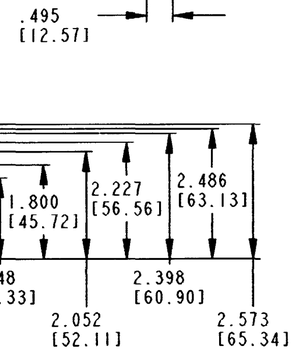

NOTES:

1. DIMENSIONS ARE IN INCHES [MILLIMETERS]
2. TOLERANCES: LOCATION OF CONTACTS = ±.003 [.08]
   LOCATION OF HOLES = ±.005 [.13]
   OTHERS = ±.015 [.38]
3. CONSULT FACTORY FOR MATERIAL AND ELECTRICAL SPECIFICATION.
4. MATING CONNECTORS: HDB36-24-9ISN-059, DT06-2S#, DT06-4S#.
5. CONTACT PLATING: ENGAGEMENT END GOLD PLATE
   P.C.B. END TIN PLATE
6. USE REMOVAL TOOL 0411-353-0805 WHEN REQUIRED TO REMOVE CONTACT FROM CAVITY NO.1

	SIGNATURE & DATE
DR	J. APOSTOL 03JAN00
CHK	7/30/07
PE	
APPD	7.27.07
SCALE 1:2	WT

MOUNTING BOX FOR HD34-24-9IPN RECPT. AND DT13-2P AND DT13-4P RECEPTACLES

ENVELOPE

CP | MATL. CODE

The Deutsch Company
DEUTSCH I.P.D.
3850 INDUSTRIAL AVE.
HEMET, CALIF. 92545

B | HDBOX-24-91PN

DWG SIZE | CODE 11139 | SHEET 1 OF 1