© 2020 TE Connectivity. All Rights Reserved.

2366066-1 SHOWN AS

REVISIONS					
P	LTR	DESCRIPTION	DATE	DWN	APVD
	A1	REVISE	15JAN2021	S.Z	I.Y
	B	REVISED PER PCN :E-21-004518	16APR2021	S.Z	Z.Z
	B1	REVISE ECN-22-186969	28NOV2022	W.W	Z.Z
	B2	REVISE ECR-25-239625	28MAR2025	K.M	Z.Z

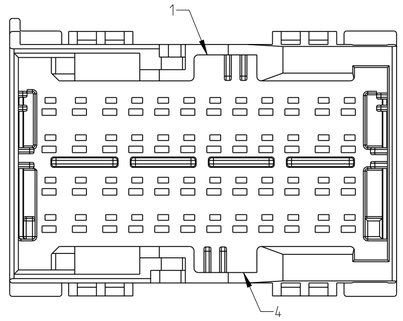

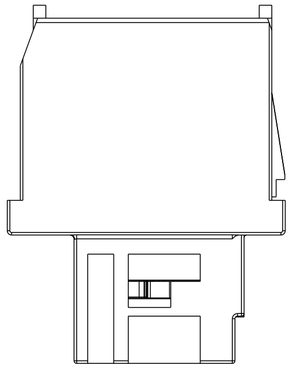

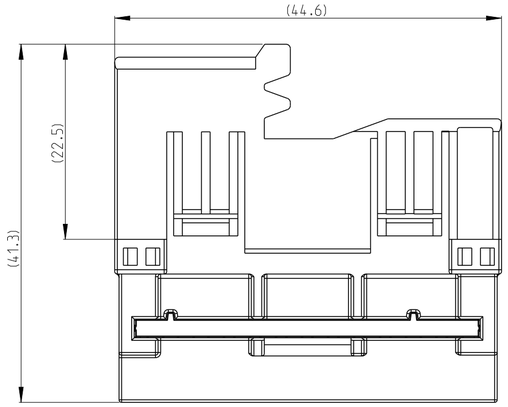

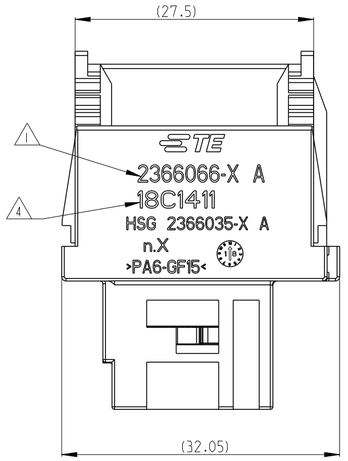

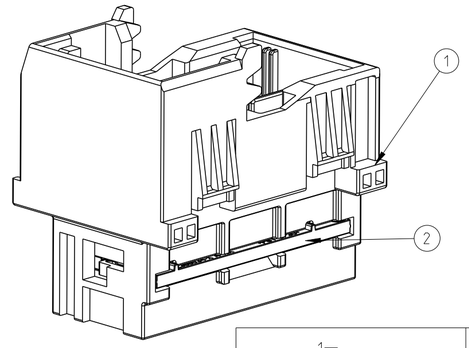

B2

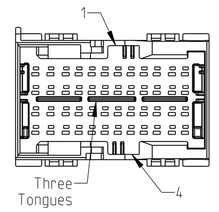

CODING E
PN:2366066-5

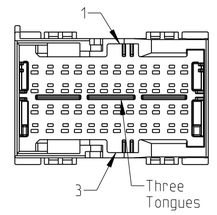

CODING F
PN:2366066-6

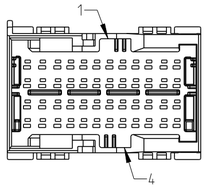

CODING A
PN:2366066-1

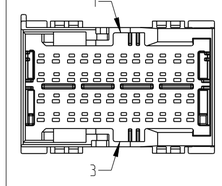

CODING B
PN:2366066-2

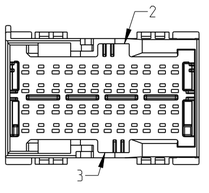

CODING C
PN:2366066-3

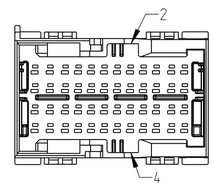

CODING D
PN:2366066-4

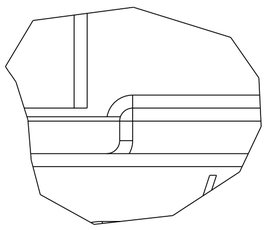

DETAIL A
SCALE 10:1

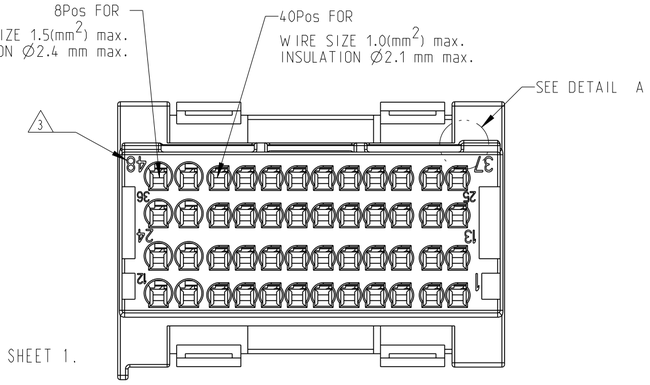

NOTES:

1. ASSEMBLY PN AND PART REVISION:
   2366066-X A
   X: X=1, 2, 3, 4 FOR VARIOUS CODE.
   A: PART REVISION, DETAIL SEE TABLE ON THE DRAWING SHEET 1.

2. MATERIAL: SEE DRAWING TABLE

3. INEDTIFICATION FOR CABLE PINOUT.

4. THE ASSEMBLY DATE CODE: INDENTIFIES THE YEAR, MONTH, DAY AND HOUR OF ASSEMBLY.
   SUCH AS :18C1411
   18: YEAR, FIRST AND SECOND DIGITS (18=2018)
   C: MONTH, THIRD DIGIT , EXCLUDING "I" , A=JAN, B=FEB, C=MARCH...H=AUGUST, J=SEPTEMBER...
   14: DAY, FOURTH AND FIFTH DIGITS(14=14th DAY)
   11: HOUR, SIXTH AND SEVENTH DIGITS(11=11AM)

5. VERIFY THE SECOND LOCK SEATED ON PRE-LOCK POSITION FOR DELIVERY.
   PULL SECOND LOCK TO PRE-LOCK BEFORE TERMINAL INSERTION IN CASE OF SECOND LOCK BEING HIT TO END-LOCK POSITION.

6. APPLICABLE TERMINAL PART NUMBERS AND WIRE SIZE SHOWN AS BELOW FOR RECOMMEND,
   CONSULT TE CONNECTIVITY FOR MORE APPLICATION INFORMATION.

1418760-1 5-1418760-1	TIN	0.50~0.75	Ø1.40~Ø1.90
1418762-1	TIN	1.0~1.5	Ø1.90~Ø2.40
TERMINAL PN	TERMINAL PLATING	WIRE SIZE (MM2)	INSULATION WIRES OD(MM)

7. THIS TAB MATES WITH 2366036-X PLUG (X=1, 2, 3, 4 FOR RELEVANT CODE).

B2

1	1	1	1	1	1	YELLOW	PBT-GF30	SECOND LOCK	2
1						ORANGE	PA6-GF15	HOUSING.CODE F	
	1					WHITE	PA6-GF15	HOUSING.CODE E	
		1				BLUE	PA6-GF15	HOUSING.CODE D	1
			1			GREEN	PA6-GF15	HOUSING.CODE C	
				1		GREY	PA6-GF15	HOUSING.CODE B	
					1	BLACK	PA6-GF15	HOUSING.CODE A	
		QTY. REQUEST PER ASSY				COLOR	MATERIAL	DESCRIPTION	ITEM NO
19.61	19.61	*19.61*	*19.61*	*19.61*	*19.61*	WEIGHT OF EACH ASSY NO. (g)			
A	A	*B*	*B*	*B*	*B*	REVISION OF EACH ASSY NO.			
2366066-6	2366066-5	2366066-4	2366066-3	2366066-2	2366066-1	TE ASSEMBLY PN			

THIS DRAWING IS A CONTROLLED DOCUMENT.

DIMENSIONS: mm

TOLERANCES UNLESS OTHERWISE SPECIFIED:
0 PLC ±0.5
1 PLC ±0.3
2 PLC ±0.20
3 PLC ±0.100
4 PLC ±0.0500
ANGLES ±5°

MATERIAL: - / -

FINISH: - / -

DWN V. TANG 03JAN2020
CHK E. JIANG 03JAN2020
APVD I. YIN 03JAN2020
PRODUCT SPEC 108-32618
APPLICATION SPEC 114-32365
WEIGHT -

RESTRICTED CUSTOMER

TE Connectivity

NAME 48POS, MCON 1.2 LL, TAB HSG ASSY UNSEALED, CONNECTOR
-

SIZE	CAGE CODE	DRAWING NO	RESTRICTED TO
A2	00779	C-2366066	

SCALE 2:1 SHEET 1 OF 2 REV B2

© 2020 TE Connectivity. All Rights Reserved.

REVISIONS					
P	LTR	DESCRIPTION	DATE	DWN	APVD
	-	SEE SHEET 1	-	-	-

APPLICATION AS SHOWN

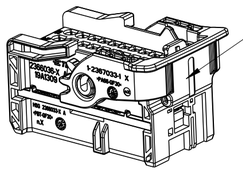

48POS.PLUG HSG ASSY 8

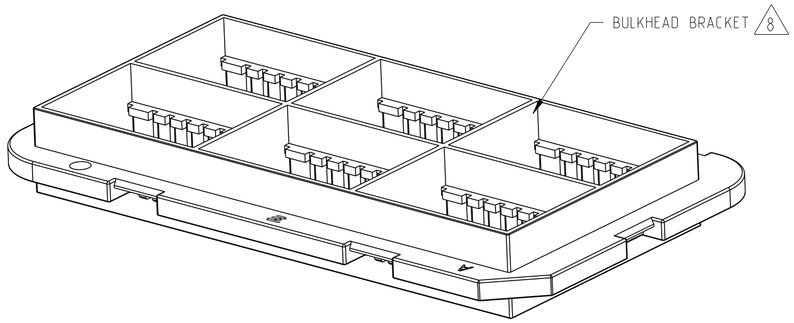

BULKHEAD BRACKET 8

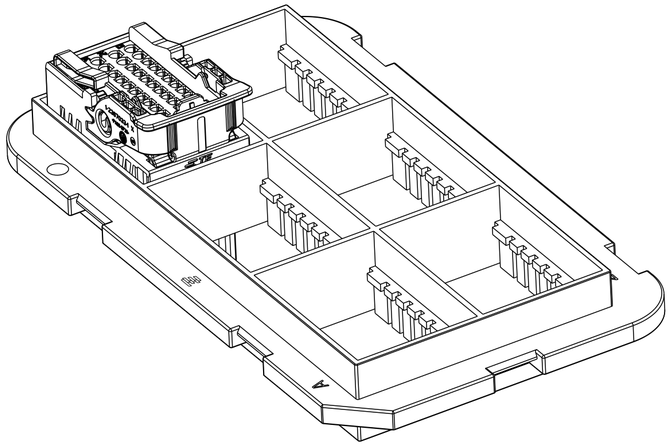

SCALE 1:1

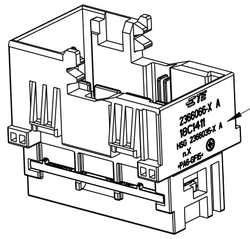

48POS.TAB HSG ASSY 8

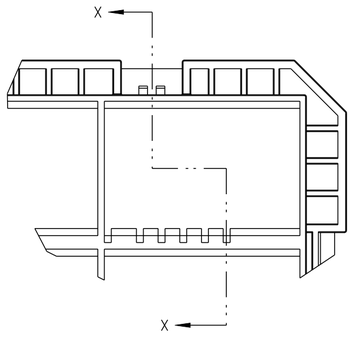

BULKHEAD BRACKET INTERFACE

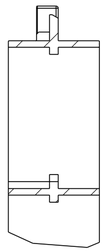

SECTION X-X

NOTES:

8 .48POS.TAB AND PLUG HSG ASSY MATES WITH BULKHEAD BRACKET.

48POS. HSG ASSY P/N: MALE SIDE:2366066-*,FEMALE SIDE:2366036-*.

BULKHEAD BRACKET P/N: 2050752-1 OR FOLLOW DIMENSIONS ON INTERFACE.

IF THERE ARE ANY OTHER APPLICATIONS FOR THIS BRACKET, PLEASE CONFIRM WITH TE PRODUCT ENGINEER FIRST.

THIS DRAWING IS A CONTROLLED DOCUMENT.

DIMENSIONS: mm

TOLERANCES UNLESS OTHERWISE SPECIFIED:

0 PLC	±0.5
1 PLC	±0.3
2 PLC	±0.20
3 PLC	±0.100
4 PLC	±0.0500
ANGLES	±5°

MATERIAL: -

FINISH: -

DWN	V. TANG	03JAN2020
CHK	E. JIANG	03JAN2020
APVD	I. YIN	03JAN2020

PRODUCT SPEC: 108-32618

APPLICATION SPEC: 114-32365

WEIGHT: -

RESTRICTED CUSTOMER

TE Connectivity

NAME: 48POS, MCON 1.2 LL, TAB HSG ASSY UNSEALED, CONNECTOR

-

SIZE	CAGE CODE	DRAWING NO	RESTRICTED TO
A2	00779	C-2366066	

SCALE 2:1 SHEET 2 OF 2 REV B2