PROPERTY OF DEUTSCH E.I.S.
THIS DRAWING CONTAINS PROPRIETARY INFORMATION THAT SHALL NOT BE DISCLOSED, DUPLICATED, NOR USED IN WHOLE OR IN PART FOR ANY PURPOSE OTHER THAN TO EVALUATE THIS DRAWING.

K	STK07H-*-*P

REVISIONS

REV	DESCRIPTIONS	DATE	APPROVED
J	REVISED PER E.O. A5592	9/22/86	J.S.
K	REDRAWN AND REVISED PER E.O. H3137	6/13/01	L.S.

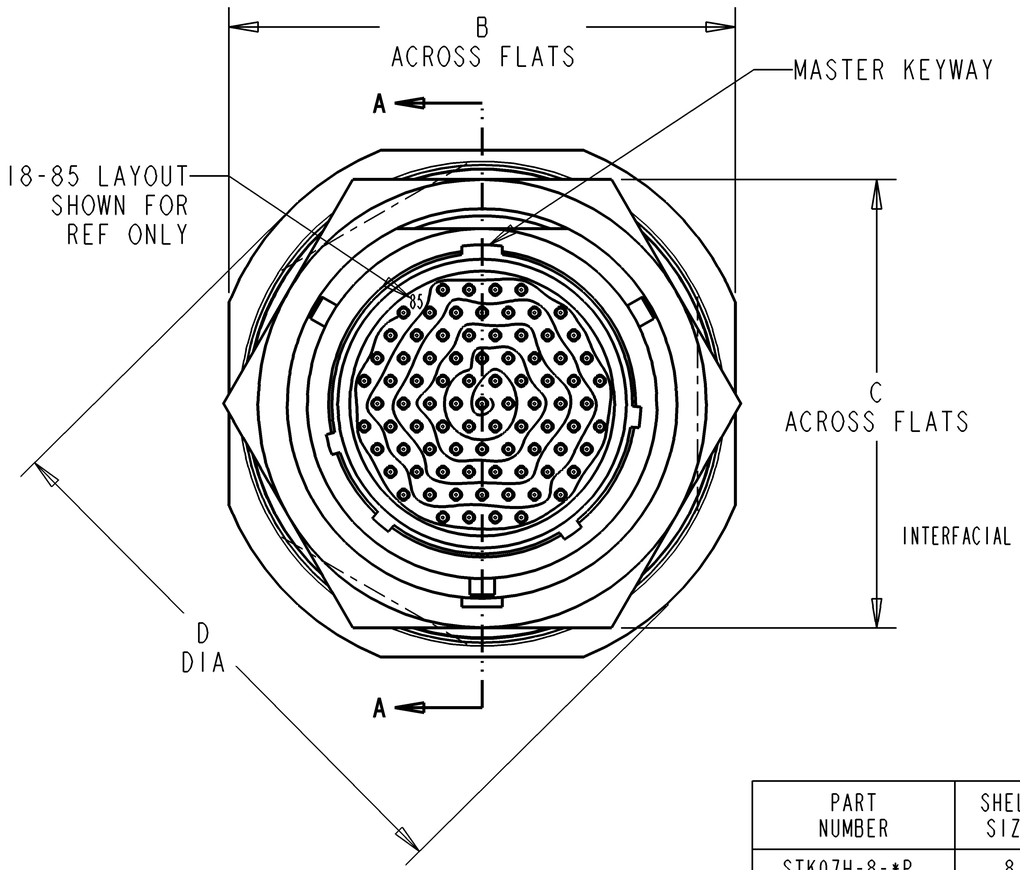

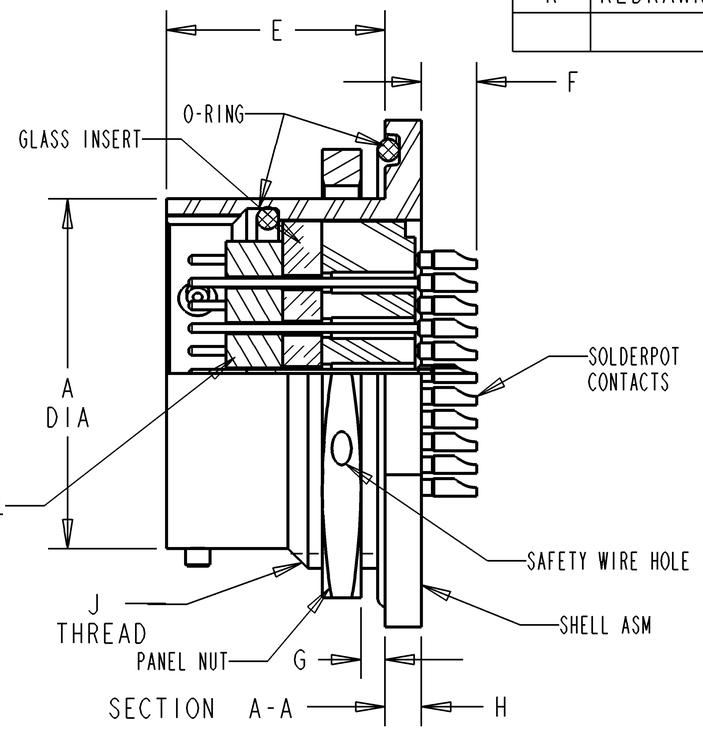

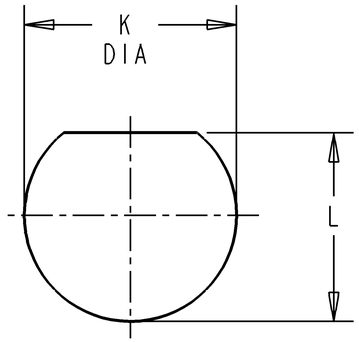

RECOMMENDED PANEL
MTG. HOLE

PART NUMBER	SHELL SIZE	A +.001 -.005	B ±.016	C ±.016	D MAX	E ±.005	F ±.030	G PANEL THK. MIN	G PANEL THK. MAX	H ±.006	J THREAD 2A	K +.010 -.000	L +.000 -.010
STK07H-8-*P	8	.473	.938	.750	1.078	.701	.177	.062	.125	.094	.5625-24UNEF	.572	.542
STK07H-10-*P	10	.590	1.062	.875	1.203	.701	.177	.062	.125	.094	.6875-24UNEF	.697	.669
STK07H-14-*P	14	.875	1.375	1.188	1.516	.701	.177	.062	.125	.094	1.0000-20UNEF	1.007	.955
STK07H-16-*P	16	1.000	1.500	1.312	1.641	.701	.177	.062	.125	.094	1.1250-18UNEF	1.134	1.084
STK07H-18-*P	18	1.125	1.625	1.438	1.766	.701	.177	.062	.125	.094	1.2500-18UNEF	1.259	1.208

FILE:STK07H-*-*P-ENV

NOTE(S):

1. INSERTS ARE CONTINUOUS DIELECTRIC.
2. CONTACT IDENTIFICATION IS IN CONTRASTING COLOR TO INSERTS.
3. FINISH: SHELL - TIN OVER NICKEL PLATED;
   CONTACTS - GOLD OVER NICKEL PLATED.
4. MATERIAL: CONTACTS-HIGH NICKEL IRON ALLOY;
   SHELL-MILD STEEL;
   GLASS INSERT-COMPRESSION GLASS;
   INTERFACIAL SEAL-ELASTOMER;
   'O' RING-SILICONE
5. DIMENSIONS ARE IN INCHES UNLESS NOTED.

	SIGNATURE & DATE
DR	D.BIBB 5/14/01
CHK	L.STOLLE 6/13/01
PE	J.AGUILERA 6/14/01
APPD	J.AGUILERA 6/14/01
SCALE:	NONE

RECEPTACLE, CONNECTOR
BAYONET COUPLING
JAM-NUT MOUNTING
SUB-MINATURE
ELECTRICAL, HERMETIC
ENVELOPE

CP | MATL CODE 70

DEUTSCH
ENGINEERED INTERCONNECT SOLUTIONS
250 Eddie Jones Way
Oceanside, CA 92054

B — DWG SIZE

STK07H-*-*P

CAGE CODE 11139

SHEET 1 OF 1