B	DM 5600-*P-691

REVISIONS

SYM	DESCRIPTION	DATE	APPROVAL
NEW	NEW RELEASE ECR 22441	11-5-64	WB
A	CHANGE PER E.O. 46215	10-26-67	D. JOHNSTON
B	REVISED PER E.O. 60978	8-6-70	HB

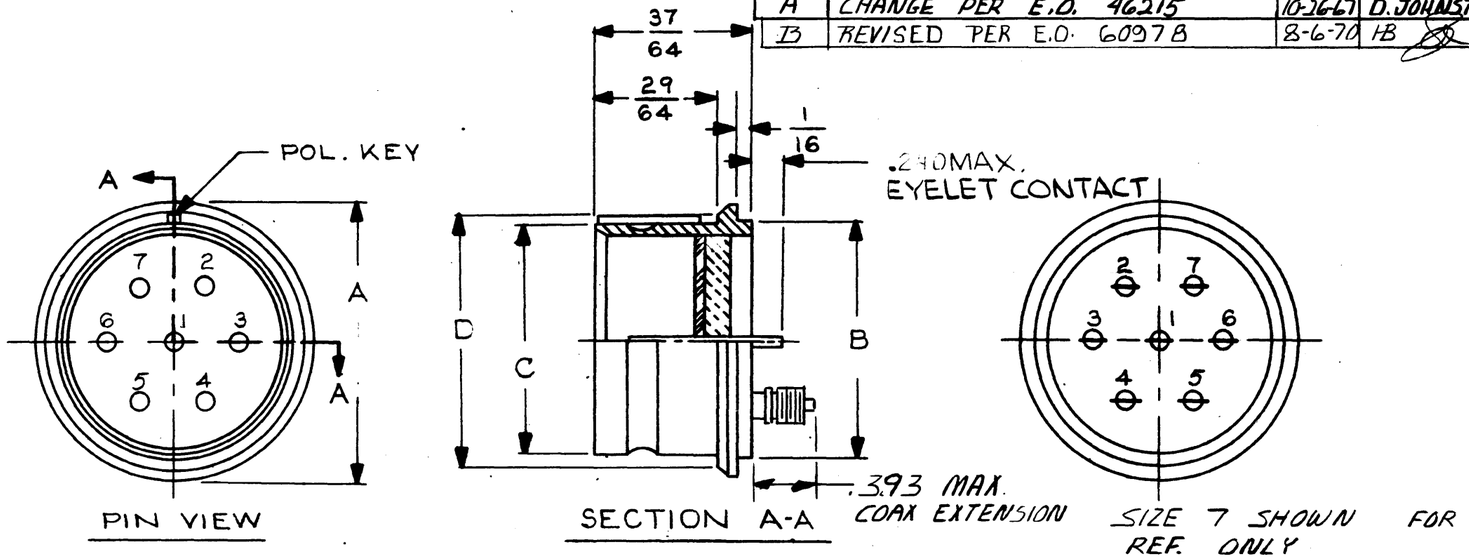

PART NO.	A	B +.000 -.004	C	D
DM 5600-3 P-691	19/32	.500	7/16	17/32
DM 5600-7 P-691	3/4	.625	37/64	11/16
DM 5600-12 P-691	7/8	.749	45/64	13/16
DM 5600-19 P-691	1"	.875	27/32	15/16
DM 5600-27 P-691	1 3/16	1.062	1"	1 1/8
DM 5600-37 P-691	1 9/32	1.156	1 1/8	1 7/32

3. SHELL - TIN OVER CADMIUM
   PIN - GOLD PLATE
2. INSERTS ARE CONTINUOUS DIELECTRIC.
1. CONTACT IDENTIFICATION IS PERMANENT.

NOTES:

NEXT ASSY	USED ON	ITEM	QTY	PART NUMBER	DESCRIPTION

APPLICATION

TOLERANCES UNLESS OTHERWISE NOTED

FRACTIONS	±.015
DECIMALS	±.005
ANGLES	±0° 30'0"

MATERIAL

FINISH

LIST OF MATERIAL

	SIGNATURE & DATE
DR	JEHAN C 30/64
CHK	W. Brooks 11-4-64
PE	[illegible] 5-64
APP	

(ENVELOPE)
RECEPTACLE, HERMETIC MINIATURE SOLDER MOUNT TYPE
HAS OIL RESISTANT, RESILIENT INSERT

SCALE NONE | WT

The Deutsch Company
ELECTRONIC COMPONENTS DIVISION
Municipal Airport • Banning, California

[redacted]

B DM5600-*P-691

DWG SIZE | CODE | SHEET 1 OF 1