REVISIONS			
REV	DESCRIPTION	DATE	APPV

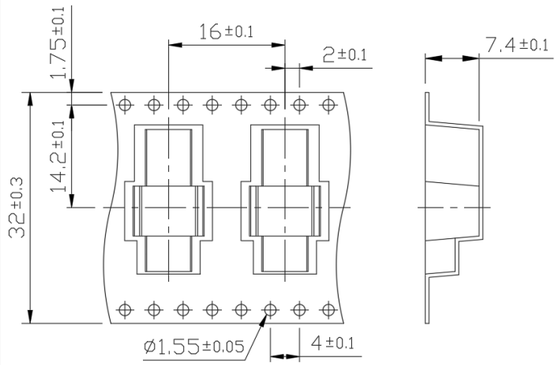

Tape and Reel Packaging

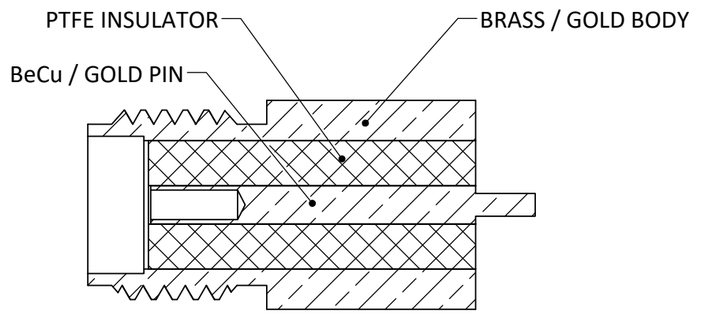

SECTION A-A

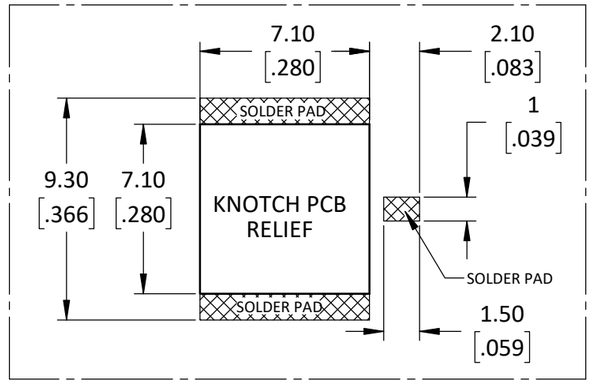

PCB LAYOUT

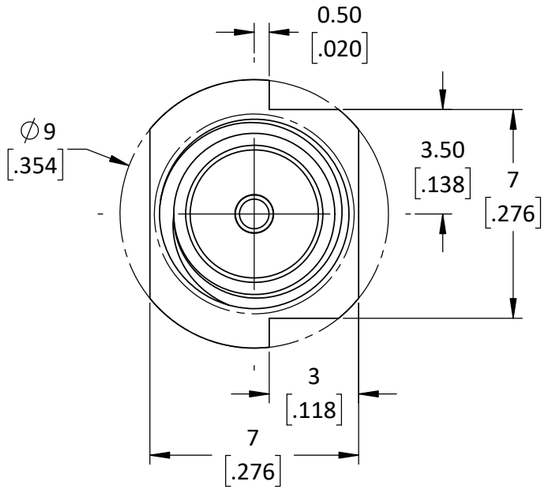

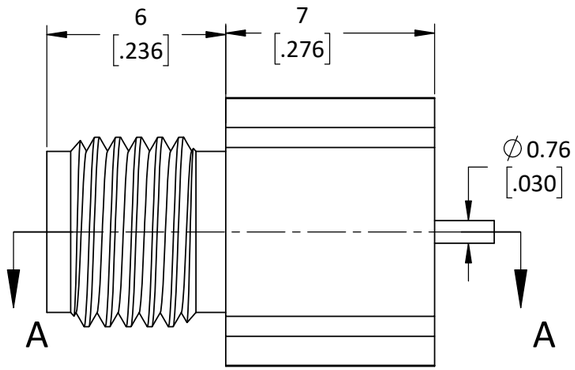

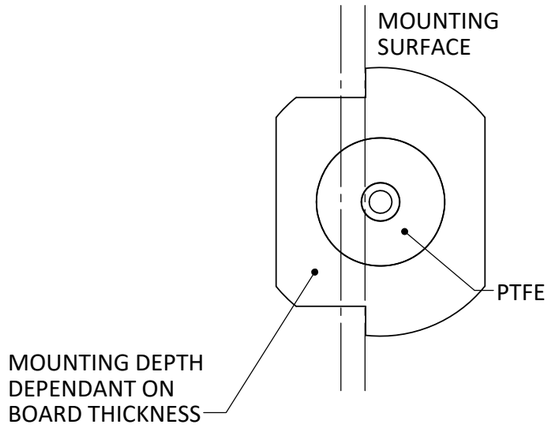

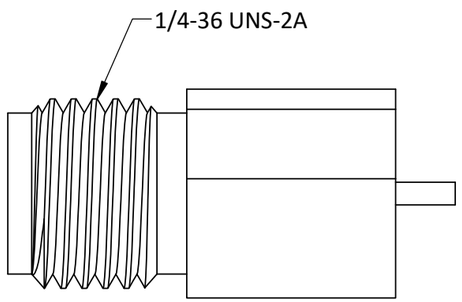

NOTES: (UNLESS OTHER WISE SPECIFIED)

1. ALL DIMENSIONS ARE IN MILIMETRES [in].
2. DIMENSIONS APPLY AFTER FINISHING. MANUFACTURE TO BE COMPLIANT WITH EU RoHS DIRECTIVE,USEMATERIALS THAT DO NOT CONTAIN REACH SUBSTANCES OF VERYHIGH CONCERN >1000ppm, AND USE DRC CONFLICT-FREE SOURCED MATERIALS.
3. SAFETY BREAK ALL SHARP CORNERS AND EDGES .02 MAXIMUM.
4. CONNECTOR IMPEDIANCE: 50Ω
5. VOLTAGE RATING: 750V RMS
6. FREQUENCY RANGE: DC 0-18 GHz
7. VSWR: 1.15 MAX @ 6GHz
8. DIELECTRIC RESISTANCE:
   1. CENTER CONTACTS: 2mΩ Max
   2. OUTER CONTACTS: 2mΩ Max
9. INTERFACE IAW MIL-STD-348A
10. OPERATING TEMPERATURE: -55º ~ 155ºC
11. DURABILITY: 500 CYCLES MIN.

SUPPLY TYPE	PN SUFFIX
GOLD FINISH TAPE / REEL	-G-T
GOLD FINISH	-G

WARNING: THIS DRAWING CONTAINS PROPRIETARY INFORMATION THAT IS THE SOLE PROPERTY OF LINX TECHNOLOGIES, AND SHALL BE TREATED AS SUCH. NO DISCLOSURE OR REPRODUCTION OF THIS DOCUMENT IS PERMITTED, IN WHOLE OR IN PART, WITHOUT THE EXPRESS WRITTEN PERMISSION OF LINX TECHNOLOGIES OR ITS DESIGNATED AGENTS.

MATERIAL: Brass PTFE/BECU

WEIGHT:

FINISH: GOLD

INTERPRET DIMENSIONS AND TOLERANCES PER ASME Y14.5.

.X ±.2
.XX ±.10
.XXX ±.050

ANGLES: ±1°

SURFACE: 32

PROJECTION:

DRAWN: JHAGER DT:

ENGR: DT:

159 ORT LANE
MERLIN, OR 97532

TITLE:
LINX TECHNOLOGIES CONSMA024
CUTOUT MOUNT

SIZE	DWG. NO.	REV
B	CONSMA024	A

SCALE: 5:1 | DO NOT SCALE DRAWING | SHEET 2 OF 3

LDCFDFB_B