DWG NO A-703AK REV A

REVISIONS			
SYM	DESCRIPTION	DATE	APPROVED
A	ADDED ITEMS 9 & 10	10-14-91	CB

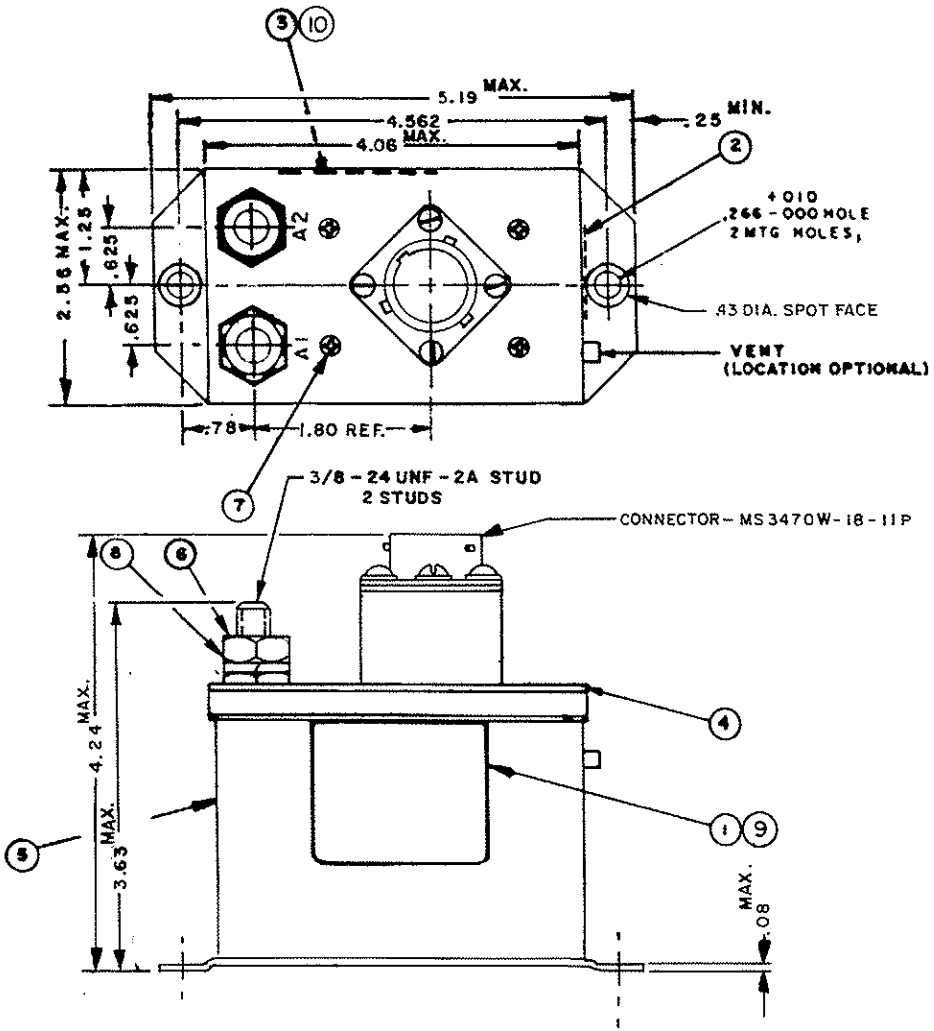

CONFIGURATION CONTROLLED

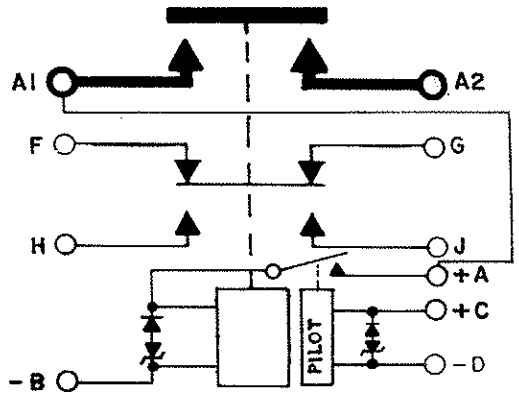

NOTES: 1. THIS UNIT MEETS THE MATERIALS & WORKMANSHIP REQUIREMENTS OF MIL-R-6106

2. REMOVE FINISH FROM MTG. SURFACE

FIND NO	QTY REQD	PART OR IDENTIFYING NO	NOMENCLATURE OR DESCRIPTION	FSCM NO	DRAWING OR SPECIFICATION	MATERIAL OR NOTE
10	1	39529-038	OVERLAY			
9	1	39529-001	OVERLAY			
8	2	51807-084	WASHER-LOCK, 3/8x.686x.094 SP		MS35338-103	BRONZE
7	4	51200-020	SCREW-NO.4x1/4 SHEET METAL		MS24626-9	STAINLESS STEEL
6	2	50407-164	NUT, 3/8-24x5/8x7/32 HEX		MS35650-3385	BRASS
5	1	32687-100	CONTACTOR ASSEMBLY-PRI.			
4	1	32232-002	PLATE-BASE COVER			
3	1	42279-001	PLATE-WIRING DIAGRAM			
2	1	25695-001	PLATE-WARNING			
1	1	16043-001	PLATE-NAME			

DWG NO A-703AK

UNLESS OTHERWISE SPECIFIED DIMENSIONS ARE IN INCHES TOLERANCES ON

2 PL.DEC.	3 PL.DEC.	ANGLES
±.06	±.010	± 1°

DASH NO	NEXT ASSY	USED ON
APPLICATION		

REF. MDC 500046-1

DR BY	H.A.S.	5-10-91
CHECKED	CB	5-10-91
ENGINEER	DPS	5-10-91
MFG.		
RELEASE		
CONTR NO		
GOVT APPVL		

HARTMAN ELECTRICAL MANUFACTURING
MANSFIELD, OHIO

CONTACTOR 400 AMP, 28 VOLTS

SIZE	FSCM NO	DWG NO
C	74063	A-703AK

SCALE: NONE SHEET 1 OF 2

REVISIONS			
SYM	DESCRIPTION	DATE	APPROVED
SEE SHEET ONE			

CONSTRUCTION	GASKET SEALED (VENTED)
MAIN CONTACTS	
CONFIGURATION	SPST N.O.
VOLTAGE (NOMINAL)	28 VDC
CURRENT:	400 AMP 1000 AMP FOR 30 SEC. 1500 AMP INRUSH
AUXILIARY CONTACTS	
CONFIGURATION	FORM Z
VOLTAGE	28 VDC-115V. 400 HZ
CURRENT RES.	5 AMP, 10 AMP CARRY ONLY
SURGE	30 AMP CARRY ONLY FOR 0.1 SEC.
COIL DATA	
DUTY CYCLE	INTERMITTENT
NOMINAL VOLTAGE	16-31 VDC
PICKUP MAX.	10 VDC
PULL THROUGH	6 VDC MAX. AT 77°F
DROPOUT VOLTAGE	7^{+0}_{-6}
RESISTANCE	14 OHM ± 20% AT 77°F
TRANSIENT SUPPRESSION	± 45 V MAX.
OPERATE TIMES	
PICKUP	35 MS MAX. AT 28 VDC
DROPOUT	35 MS MAX. AT 28 VDC
CONTACT BOUNCE	.004 SEC. MAX. MAKE .003 SEC. MAX. BREAK N.O. ONLY
ENVIRONMENTAL DATA	
AMBIENT TEMP.	-67°F TO + 160°F
LIFE ELECTRICAL	15,000 CYCLES MIN.
LIFE MECHANICAL	100,000 CYCLES
WEIGHT MAX.	2 LBS. 3 OZ.

PILOT RELAY

CONTACT CONFIGURATION	SPST
VOLTAGE NOMINAL	28 VDC
CURRENT	5 AMP
COIL DUTY	CONTINUOUS
COIL CURRENT AT 31V	.15 AMP MAX.
PICKUP	18V. MAX.
DROPOUT	7V. MAX.
TRANSIENT SUPPRESION	± 45 V

NOTE:
DIODES ARE JANTX GLASS CASE 1000 PIV
ZENERS ARE JANTX GLASS CASE

DWG NO A-703AK

CONFIGURATION CONTROLLED

DASH NO	NEXT ASSY	USED ON
APPLICATION		

UNLESS OTHERWISE SPECIFIED DIMENSIONS ARE IN INCHES TOLERANCES ON

2 PL.DEC.	3 PL.DEC.	ANGLES
±	±	±

MATERIAL

REF.
MDC
5D0046-1

DR BY	H.A.S.	5-10-91
CHECKED	CB	5-10-91
ENGINEER	RTS	5-10-91
MFG.		
RELEASE		
CONTR NO.		
GOVT APPVL		

HARTMAN ELECTRICAL MANUFACTURING
MANSFIELD, OHIO

CONTACTOR 400 AMP, 28 VOLTS

SIZE	FSCM NO.	DWG NO.
C	74063	A-703AK

SCALE | SHEET 2 OF 2