PROPERTY OF DEUTSCH E.C.D
THIS DRAWING CONTAINS PROPRIETARY INFORMATION THAT SHALL NOT BE DISCLOSED, DUPLICATED, NOR USED IN WHOLE OR IN PART FOR ANY PURPOSE OTHER THAN TO EVALUATE THIS DRAWING.

A	77114-12-**S*

REVISIONS

REV	DESCRIPTIONS	DATE	APPROVED
N/C	NEW RELEASE PER E.O.H4199	6/3/05	F.B.
A	REVISED PER E.O.H4586	091123	MA

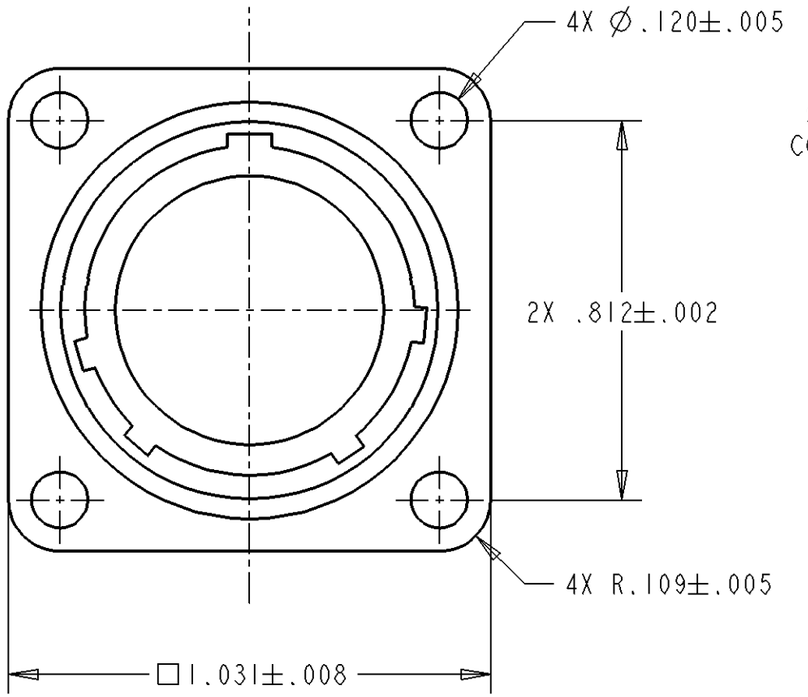

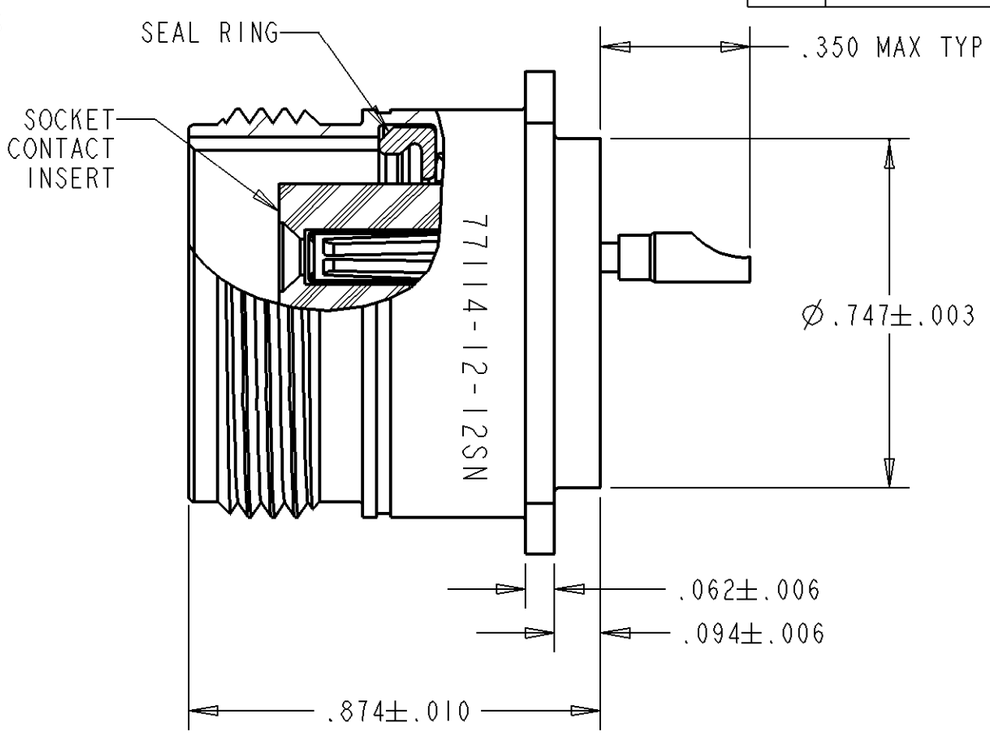

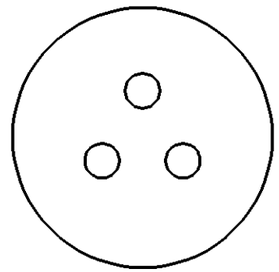

ARR 12-3
3 SIZE 16 CONT

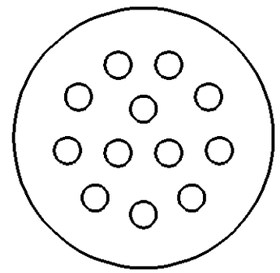

ARR 12-12
12 SIZE 20 CONT

1. DIMENSIONS ARE IN INCHES UNLESS OTHERWISE SPECIFIED.
2. INSERT ARRANGEMENT PER MIL-STD-1554.
3. LEAK RATE: <1E-8 cc/sec He @ 1 atm.
4. INSULATION RESISTANCE: >5000 MEGOHM @ 500 VDC
   DIELECTRIC WITHSTANDING VOLTAGE:
   NO BREAKDOWN @ 2300 VAC (SIZE 16) / @1500 VAC (SIZE 20)
5. PART NUMBER DESCRIPTION: 77114-12-**P*
   - P: KEYWAY CLOCKING POSITION; N=NORMAL, 6, 7,....
   - **: INSERT ARRANGEMENT
6. MATERIAL:
   SHELL - 304L STAINLESS STEEL
   INSULATOR - GLASS INSERT
   SOLDERPOT/SOCKET CONTACT - 52 ALLOY/COPPER ALLOY
   SEAL RING/SOCKET INSERT - ELASTOMER/PLASTIC
7. FINISH:
   SHELL - PASSIVATION
   CONTACT - GOLD OVER NICKEL

NOTE(S):

FILE:77114-12-XXSX-ENV-SNAP

	SIGNATURE & DATE
DR	S.LUI 6/1/05
CHK	F.BAUTISTA 6/3/05
PE	E.BALDERAZ 6/3/05
APPD	E.BALDERAZ 6/3/05
SCALE:	

RECEPTACLE, CONNECTOR
THREADED COUPLING
FLANGE MOUNT
M83723 SERIES III &
ESC10 TYPE
SOCKET UNIT

ENVELOPE

CP | MATL CODE 74

DEUTSCH
ENGINEERED INTERCONNECT SOLUTIONS
250 Eddie Jones Way
Oceanside, CA 92058

B | 77114-12-**S*

DWG SIZE | CAGE CODE 11139 | SHEET 1 OF 1