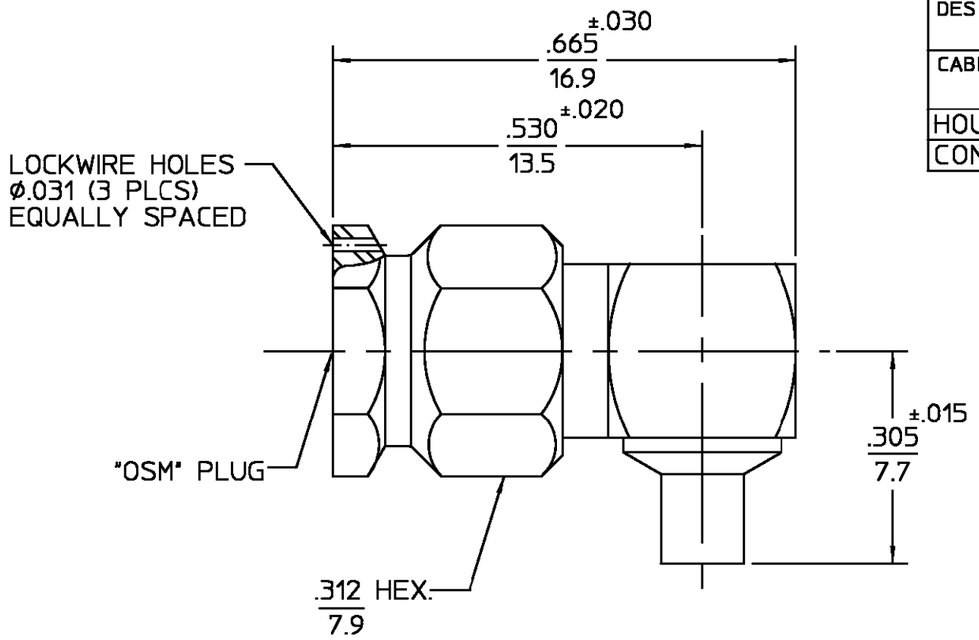

DESIGNED FOR USE WITH .085 S.R.	
CABLE ENTRY DIAMETER MINIMUM	
HOUSING	.088
CONTACT	.037

REVISIONS			
REV	DESCRIPTION	DATE	APPROVED
01_1	REVISED	8/20/86	

COMPONENT	MATERIAL	FINISH
HOUSING EXTRA HOUSING CAP	STAINLESS STEEL PER ASTM-A484 AND ASTM-A582, TYPE 303	GOLD PLATE PER MIL-G-45204
COUPLING NUT	STAINLESS STEEL PER ASTM-A484 AND ASTM-A582, TYPE 303	PASSIVATE PER QQ-P-35
DIELECTRIC	TFE FLUOROCARBON PER ASTM-D-1457	N/A
CENTER CONTACT	BERYLLIUM COPPER PER ASTM-B-196 OR ASTM-B-197, ALLOY C17300, CONDITION H	GOLD PLATE PER MIL-G-45204
RETAINING RING	BERYLLIUM COPPER PER ASTM-B-194, ALLOY C17200, CONDITION H	N/A
GASKET	SILICONE RUBBER PER ZZ-R-765	N/A

ELECTRICAL	MECHANICAL	ENVIRONMENTAL
Nominal Impedance (Ohms) 50	Interface Dimensions MIL-STD-348A, Fig. 310-1	Temperature Rating -65°C to 165°C
Frequency Range (GHz) DC to 12.4	Recommended Mating Torque 7 to 10 In-Lbs	Vibration MIL-STD-202, Method 204, Condition D
Volt Rating (VRMS MAX) @ Sea Level 335	Mating Characteristics:	Shock MIL-STD-202, Method 213, Condition I
VSWR 1.10 +0.01 f(GHz)	Insertion (MAX Lbs) N/A	Thermal Shock MIL-STD-202, Method 107, Condition B, Except High Temp +115°C
Insertion Loss (dB MAX) .05 $x\sqrt{f(GHz)}$	Withdrawal (MIN Oz) N/A	Moisture Resistance MIL-STD-202, Method 106
RF Leakage (dB MIN) -90 @2 to 3 GHz	Force to Engage and Disengage (In-Lbs MAX) 2.0	Corrosion - MIL-STD-202, Method 101, Condition B, 5% salt spray
Corona, 70,000 Ft (VRMS MIN) 250	Center Contact Captivation	
Dielectric Withstanding Voltage (VRMS MIN) @ Sea Level 1,000	Axial (Lbs) 6.0	
Contact Resistance (Milliohms MAX)	Radial (In-Oz) 4.0	
Center Contact 4.0	Cable Retention	
Outer Contact 2.0	Axial Force (LXs) 30	
Cable to Housing 0.5	Torque (In-Oz) 16	
RF High Potential @ Sea Level (VRMS MIN @ 5 MHz) 670	Weight (Grams) TBD	
I.R.(Megohms MIN) 5,000		

.XXX = in
XX.X = mm (REF)

UNLESS OTHERWISE SPECIFIED DIMENSIONS ARE IN INCHES

FRAC. ± 1/64 DEC. ±.005 ANGLES ± 1°

DRAWN BY	DC	10/21/82
CHECKED BY	RMF	10/22/82
APP'D BY	TJ	10/22/82

These drawings and specifications are the property of M/A COM Interconnect Div. and shall not be reproduced or copied or used in whole or in part as the basis for the manufacture or sale of item(s) without written permission.

USE ASS'Y PROCEDURE

408-04917
NO. A.P. (20-547)

AMP
AMP Incorporated
140 Fourth Avenue
Waltham, MA 02451-7599

TITLE "OSM" RIGHT ANGLE CABLE PLUG DIRECT SOLDER ATTACHMENT M39012/80-3001 CAT B

SIZE	CODE IDENT NO.		REV
B	26805	2007-8001-92	01_1
SCALE 5:1			SHEET 1 OF 1

CUSTOMER DRAWING

AMP PART # 1051160-1
SHEET 1 OF 1 REV A