THIS DRAWING IS UNPUBLISHED. RELEASED FOR PUBLICATION -
© COPYRIGHT - BY TYCO ELECTRONICS CORPORATION ALL RIGHTS RESERVED.

REVISIONS					
P	LTR	DESCRIPTION	DATE	DWN	APVD
	D1	REVISED PER ECR-10-019377	04OCT2010	HMR	TM
	E	REVISED PER ECR-14-000206	26DEC2013	PV	RB
	E1	REVISED PER ECR-24-201925	05MAR2024	HY	TK
	E2	REVISED PER ECR-24-230839	07JAN2025	HY	AO

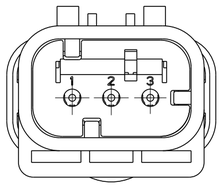

~~1871413-2~~ 5
SCALE 2:1

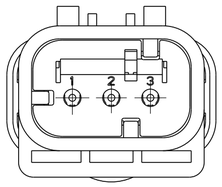

~~1871413-3~~ 5
SCALE 2:1

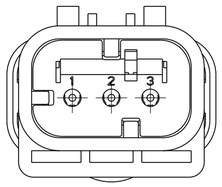

~~1871413-4~~ 5
SCALE 2:1

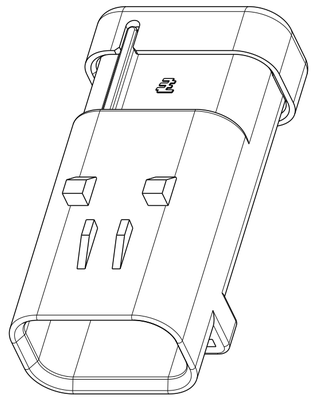

SCALE 2:1

1 MATERIAL: 15% GLASS FILLED THERMOPLASTIC
COLOR: BLACK
2 MATERIAL: 15% GLASS FILLED THERMOPLASTIC
COLOR: (SEE TABLE)
3 MATERIAL: SILICONE
COLOR: RUST

4. WIRE INSULATION RANGE: ∅1.3~∅2.54

5 OBSOLETE PARTS: OBSOLETE CIS STREAMLINING PER D.RENAUD/D.SINISI

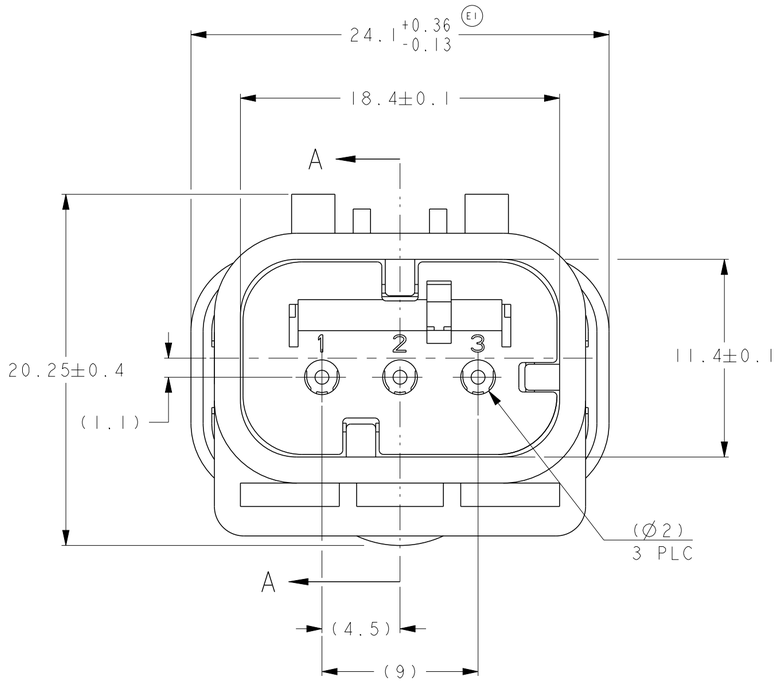

1871413-1 SHOWN

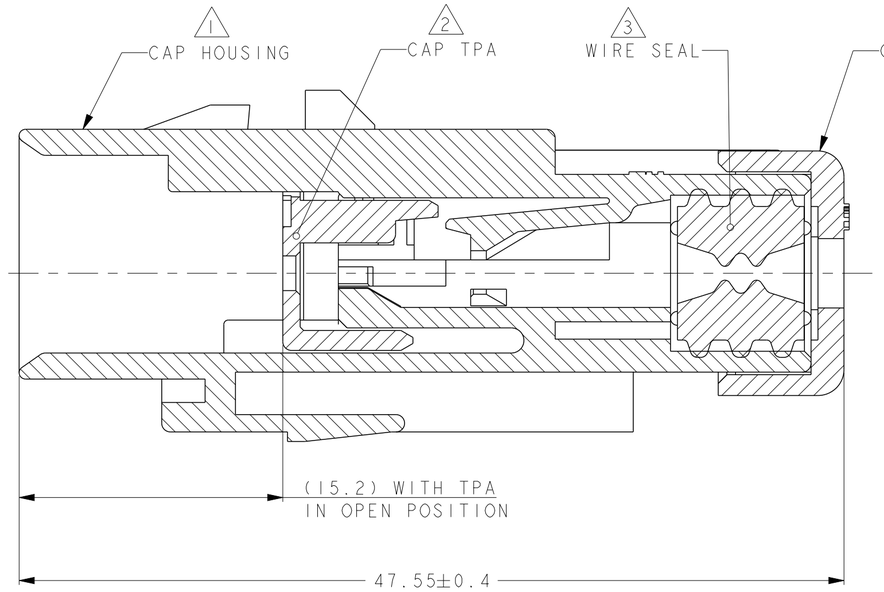

A - A
OPEN POSITION

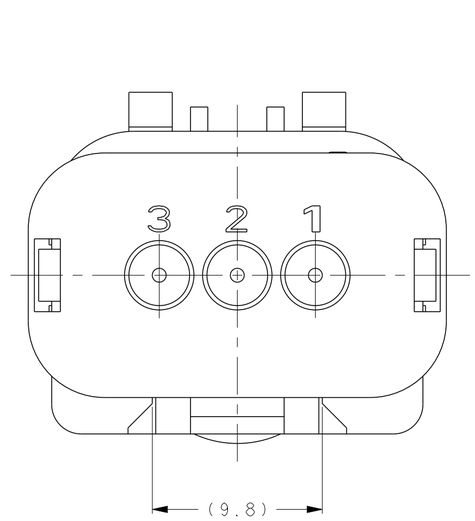

5 OBSOLETE		
	~~GREEN~~	~~1871413-4~~
	~~YELLOW~~	~~1871413-3~~
	~~GRAY~~	~~1871413-2~~
	RED	1871413-1
	TPA COLOR	PART NUMBER

THIS DRAWING IS A CONTROLLED DOCUMENT.

DIMENSIONS: mm

TOLERANCES UNLESS OTHERWISE SPECIFIED:
0 PLC ±-
1 PLC ±
2 PLC ±
3 PLC ±
4 PLC ±
ANGLES ±-

MATERIAL -
FINISH -

DWN Y.KATO 21DEC2005
CHK J.AKASAKA 28DEC2005
APVD D.MITSUGI 28DEC2005
PRODUCT SPEC 108-2184
APPLICATION SPEC 114-13065
WEIGHT -

TE Connectivity

NAME
CAP ASSY, 3 POS.
BRACKET REVERSE TYPE
SMALL WIRE SIZE AMP SEAL 16

SIZE	CAGE CODE	DRAWING NO	RESTRICTED TO
A2	00779	C-1871413	-

CUSTOMER DRAWING | SCALE 4:1 | SHEET 1 OF 1 | REV E2