THIS DRAWING IS A CONTROLLED DOCUMENT.

LOC	DIST
HJ	-

REVISIONS

P	LTR	DESCRIPTION	DATE	DWN	APVD
	C	ECR-14-007162 (Packaging information)	13OCT2015	AP	AK
	B	REVISED PER ECO-13-009556	14JUN2013	UKo	AK
	A10	New Pos. 2	10JUN2009	UKo	HD
	A9	New Pos. 36	28FEB2008	UKo	HD

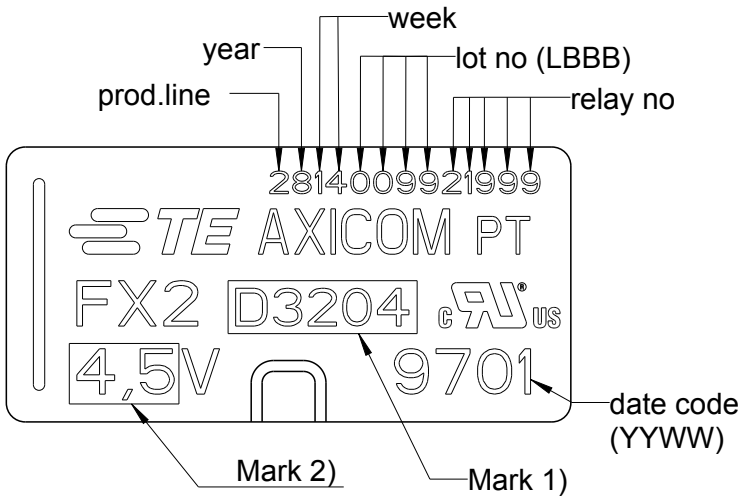

Packaging data code (Box, bag, reels):
P(YWWDSL)000
Shipping data code:
YYWWD

P - Product code (E to FX relay)
Y(Y) - Year (last digit for packaging)
WW - calendar week (from date code)
D - Day of the week (1=Sat,.....and 7=Fri)
S - Shift (1=day shift, 2 night shift)
L - Production Line (line A, B, C)
B- Weekly sequential number
000 - For internal use

Pos.	Relay-Typ	Mark 1)	Mark 2)	PN
1	D3202	D3202	12	1462034-1
2	D3202W	D3202	12	5-1462034-0
3	D3204	D3204	4.5	1462034-2
4	D3205	D3205	6	1462034-5
5	D3206	D3206	3	1462034-6
6	D3206H	D3206	3	1462034-7
7	D3206W	D3206	3	4-1462034-9
8	D3207	D3207	4	1462034-8
9	D3209	D3209	5	1462034-9
10	D3209U	D3209	5	1-1462034-2
11	D3210	D3210	9	1-1462034-3
12	D3212	D3212	24	1-1462034-4
13	D3212K	D3212	24	4-1462034-0
14	D3213	D3213	48	1-1462034-5
15	D3214	D3214	4.5	1-1462034-6
16	D3221	D3221	3	1-1462034-9
17	D3222	D3222	4.5	2-1462034-0

RELEASED FOR PUBLICATION 2006
ALL RIGHTS RESERVED.
© COPYRIGHT 2006
THIS DRAWING IS UNPUBLISHED.

DRAWING ALIAS: D02307-DOK02

DIMENSIONS: mm

TOLERANCES UNLESS OTHERWISE SPECIFIED: DIN 7168-m

0 PLC	±-
1 PLC	±-
2 PLC	±-
3 PLC	±-
4 PLC	±-
ANGLES	±-

DWN MK 9249 23MAR1995
CHK HD 9121 23MAR1995
APVD HD 9121 23MAR1995
PRODUCT SPEC -
APPLICATION SPEC -
WEIGHT -

MATERIAL -
FINISH -

TE Connectivity

NAME FX2-Relay Marking

SIZE	CAGE CODE	DRAWING NO	RESTRICTED TO
A4	00779	C- 1462034-1	-

CUSTOMER DRAWING

SCALE 5:1 SHEET 1 OF 2 REV C

LOC	DIST
HJ	-

REVISIONS

P	LTR	DESCRIPTION	DATE	DWN	APVD
	-	SEE SHEET 1	-	-	-

Pos.	Relay-Typ	Mark 1)	Mark 2)	PN
18	D3223	D3223	5	2-1462034-1
19	D3224	D3224	6	2-1462034-2
20	D3225	D3225	9	2-1462034-3
21	D3226	D3226	12	2-1462034-4
22	D3227	D3227	24	2-1462034-5
23	D3228	D3228	48	2-1462034-6
24	D3241	D3241	L1-3	2-1462034-8
25	D3242	D3242	L1-4.5	2-1462034-9
26	D3243	D3243	L1-5	3-1462034-0
27	D3244	D3244	L1-6	3-1462034-1
28	D3245	D3245	L1-9	3-1462034-2
29	D3246	D3246	L1-12	3-1462034-3
30	D3247	D3247	L1-24	3-1462034-4
31	D3253U	D3253	L1-5	3-1462034-6
32	D3211	D3211	18	4-1462034-3
33	D3215	D3215	12	4-1462034-4
34	D3218	D3218	24	4-1462034-5
35	D3218H	D3218	24	4-1462034-6
36	D3212H	D3212	24	4-1462034-7
37	D3212I	D3212	24	4-1462034-8
38	D3276	D3276	12	6-1462034-1
39	D3282	D3282	L1-4.5	6-1462034-2
40	D3217	D3217	12	4-1462034-2
41				

RELEASED FOR PUBLICATION 2006
ALL RIGHTS RESERVED.
© COPYRIGHT 2006
THIS DRAWING IS UNPUBLISHED.

DRAWING ALIAS: D02307-DOK02

DIMENSIONS: mm

TOLERANCES UNLESS OTHERWISE SPECIFIED: DIN 7168-m

0 PLC	±-
1 PLC	±-
2 PLC	±-
3 PLC	±-
4 PLC	±-
ANGLES	±-

DWN MK 9249 23MAR1995
CHK HD 9121 23MAR1995
APVD HD 9121 23MAR1995
PRODUCT SPEC -
APPLICATION SPEC -
WEIGHT -

MATERIAL -
FINISH -

TE Connectivity

NAME FX2-Relay Marking

SIZE	CAGE CODE	DRAWING NO	RESTRICTED TO
A4	00779	C- 1462034-1	-

CUSTOMER DRAWING

SCALE 5:1 SHEET 2 OF 2 REV C