© 2022 TE Connectivity. All Rights Reserved.

REVISIONS					
P	LTR	DESCRIPTION	DATE	DWN	APVD
	B	REDRAWN EO.33096	23DEC1965	GK	GK
	C	ECR 22-136752	25APR2022	OG	LM

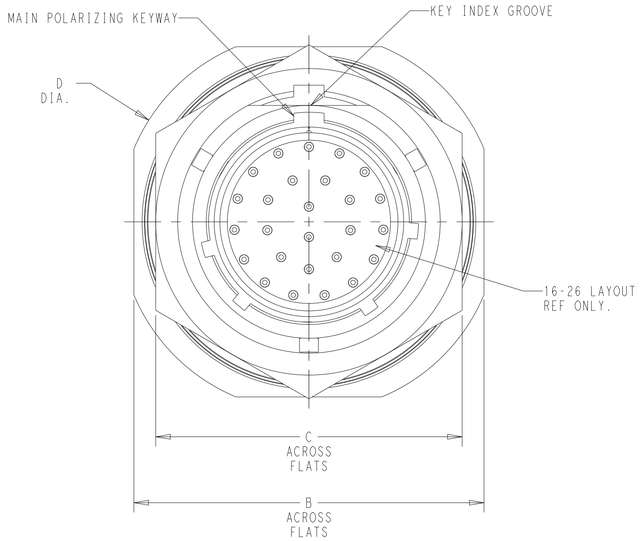

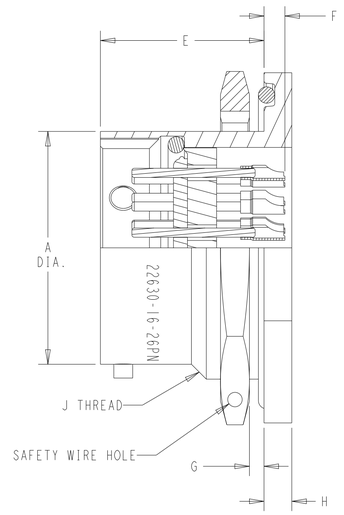

SECTION A-A

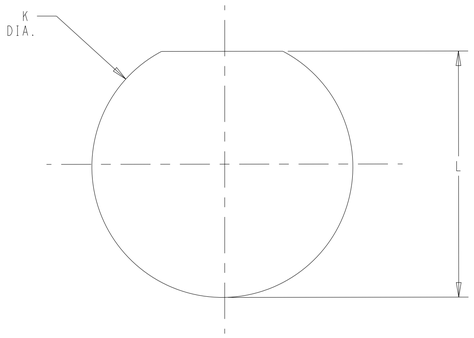

RECOMMENDED PANEL MTG. HOLE

SHELL SIZE	PART NUMBER	A +.001 -.006	B ±.016	C ±.016	D MAX.	E +.031 -.000	F MAX.	G PANEL THK. MIN.	G PANEL THK. MAX.	H ±.015	J THREAD CLASS 2A	K +.010 -.000	L +.000 -.010	WT. LBS.
8	22630- 8-xP	.473	.938	.750	1.078	.691	.129	.062	.125	.117	9/16-24 NEF	.572	.542	.046
10	22630-10-xP	.590	1.062	.875	1.203	.691	.129	.062	.125	.117	11/16-24 NEF	.697	.669	.059
12	22630-12-xP	.750	1.250	1.062	1.391	.691	.129	.062	.125	.117	7/8-20 UNEF	.884	.830	.088
14	22630-14-xP	.875	1.375	1.188	1.516	.691	.129	.062	.125	.117	1-20 UNEF	1.007	.955	.106
16	22630-16-xP	1.000	1.500	1.312	1.641	.691	.129	.062	.125	.117	1 1/8-18 NEF	1.134	1.084	.121
18	22630-18-xP	1.125	1.625	1.438	1.766	.691	.129	.062	.125	.117	1 1/4-18 NEF	1.259	1.208	.150
20	22630-20-xP	1.250	1.812	1.562	1.954	.879	.035	.062	.250	.148	1 3/8-18 NEF	1.384	1.333	.210
22	22630-22-xP	1.375	1.938	1.688	2.078	.879	.035	.062	.250	.148	1 1/2-18 NEF	1.507	1.459	.237
24	22630-24-xP	1.500	2.062	1.812	2.203	.912	.046	.062	.250	.148	1 5/8-18 NEF	1.634	1.575	.254

1. DIMENSIONS ARE IN INCHES UNLESS OTHERWISE SPECIFIED
2. INSERT ARRANGEMENT PER MIL-STD-1669
3. LEAK RATE: 1E-8 cc/sec He @ 1 atm
4. INSULATION RESISTANCE: >5000 MEGOHM @ 1500 VAC
   DIELECTRIC WITHSTANDING VOLTAGE: NO BREAKDOWN @ 1500 VAC
5. MATERIAL
   SHELL: MILD STEEL
   CONTACT: HIGH NICKEL-IRON ALLOY
   O-RING: FLOUROSILICONE
   PANEL NUT: MILD STEEL
   GLASS: COMPRESSION GLASS
6. FINISH
   SHELL: ELECTROPOLISH (PASSIVATED)
   CONTACT: GOLD OVER NICKEL
   PANEL NUT: TIN OVER NICKEL

MC: 73 | FINISH:

DESCRIPTION:

RECEPTACLE, CONNECTOR, ELECTRICAL, HERMETIC, TRI-KAM COUPLING, JAM NUT MOUNTING

CP | CAGE CODE

FOR BEST WORKMANSHIP PRACTICES, REFERENCE TE SPEC 101-32119

PARTS SHALL COMPLY WITH TE WORKMANSHIP 101-32106

THIS DRAWING IS A CONTROLLED DOCUMENT.

DIMENSIONS: in

TOLERANCES UNLESS OTHERWISE SPECIFIED:
0 PLC ±-
1 PLC ±.1
2 PLC ±.02
3 PLC ±.005
4 PLC ±.0005
ANGLES ±-

MATERIAL - / -

FINISH - / -

DWN OSCAR GONZALEZ 25-Apr-22
CHK LUIS MARTINEZ 22-Apr-22
APVD LUIS MARTINEZ 22-Apr-22 NAME

PRODUCT SPEC -

APPLICATION SPEC -

WEIGHT -

TE Connectivity

PRELIMINARY

RECEPTACLE,CONNECTOR

SIZE	CAGE CODE	DRAWING NO	RESTRICTED TO
A1	-	C-22630-x-xP	-

CUSTOMER DRAWING | SCALE 2:1 | SHEET 1 OF 1 | REV C