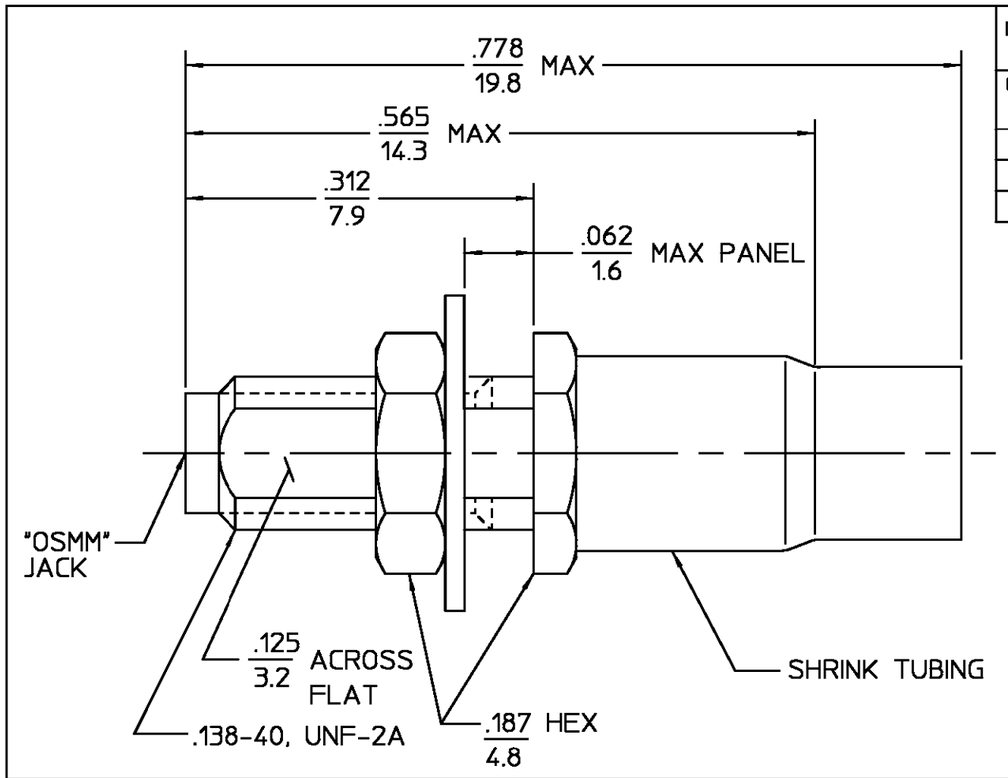


| DESIGNED FOR USE WITH RG-196/U CABLE | |
|---|---|
| CABLE ENTRY DIAMETER MINIMUM | |
| FERRULE | .099 |
| HOUSING | .036 |
| CONTACT | .012 |

| REVISIONS | | | |
|---|---|---|---|
| REV | DESCRIPTION | DATE | APPROVED |
| $02_2$ | REVISED | 7/13/97 | |

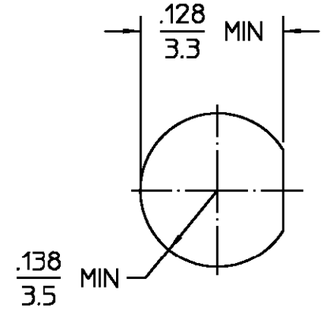


RECOMMENDED MOUNTING HOLE

| ELECTRICAL | MECHANICAL | ENVIRONMENTAL |
|---|---|---|
| Nominal Impedance (Ohms) 50 | Interface Dimensions Per M/A-Com Catalog | Vibration MIL-STD-202, Method 204, Condition D |
| Frequency Range (GHz) DC to 18.0 | Recommended Mating Torque 2 In-Lbs | Shock MIL-STD-202, Method 213, Condition I |
| VSWR 1.15 +.01f(GHz) | Mating Characteristics: | Thermal Shock MIL-STD-202, Method 107, Condition B, Except High Temp 200°C |
| Insertion Loss (dB MAX) .08 $\sqrt{f(GHz)}$ | Insertion (MAX Lbs) 3.0 | Moisture Resistance MIL-STD-202, Method 106 |
| RF Leakage (dB MIN) -(100-f(GHz)) | Withdrawal (MIN Oz) 0.5 | Corrosion - MIL-STD-202, Method 101, Condition B, 5% salt spray |
| Corona, 70,000 Ft (VRMS MIN) 150 | Force to Engage and Disengage (In-Lbs MAX) 1.0 | |
| Dielectric Withstanding Voltage (VRMS MIN @ Sea Level 500 | Center Contact Captivation | .XXX = in<br>XX.X = mm (REF) |
| Contact Resistance (Milliohms MAX) | Axial (Lbs) N/A | |
| Center Contact 3.5 | Radial (In-Oz) N/A | |
| Outer Contact 2.8 | Cable Retention | |
| RF High Potential @ Sea Level | Axial Force (Lbs) 10 | |
| (VRMS MIN @ 5 MHz) 375 | Torque (In-Oz) N/A | |
| I.R.(Megohms MIN) 5,000 | Weight (Grams) TBD | |

| COMPONENT | MATERIAL | FINISH |
|---|---|---|
| HOUSING<br>MOUNTING NUT<br>LOCKWASHER | STAINLESS STEEL PER ASTM-A484 AND ASTM-A582, TYPE 303 | GOLD PLATE PER MIL-G-45204 |
| DIELECTRIC | PTFE FLUOROCARBON PER ASTM-D-1457 | N/A |
| CENTER CONTACT | BERYLLIUM COPPER PER ASTM-B-196 OR ASTM-B-197, ALLOY C17300, CONDITION H | GOLD PLATE PER MIL-G-45204 |
| SHRINK TUBING | HEAT SHRINKABLE POLYOLEFIN COMPOUND MIL-I-23053/4 | N/A |
| FERRULE | COPPER OR BRASS ALLOY ROCKWELL F65 MAXIMUM | GOLD PLATE PER MIL-G-45204 |

UNLESS OTHERWISE SPECIFIED DIMENSIONS ARE IN INCHES

FRAC. ± 1/64 DEC. ±.005 ANGLES ± 1°

DRAWN BY EJC DATE 8/31/71

CHECKED BY PRB 8/31/71

APP'D BY BWC 8/31/71

These drawings and specifications are the property of M/A COM Interconnect Div. and shall not be reproduced or copied or used in whole or in part as the basis for the manufacture or sale of item(s) without written permission.

USE ASS'Y PROCEDURE

NO. A.P. 40-005

408-08253

AMP Incorporated
140 Fourth Avenue
Waltham, MA 02451-7599

TITLE "OSMM" STRAIGHT CABLE JACK - CRIMP ATTACHMENT

| SIZE | CODE IDENT NO. | | REV |
|---|---|---|---|
| B | 26805 | 4034-7196-00 | $02_2$ |
| SCALE 8:1 | | | SHEET 1 OF 1 |

CUSTOMER DRAWING

AMP PART # 1059060-1
SHEET 1 OF 1 REV A