DRAWING MADE IN THIRD ANGLE PROJECTION

THIS DRAWING IS UNPUBLISHED. RELEASED FOR PUBLICATION , 19 .
© COPYRIGHT 19 BY AMP INCORPORATED, HARRISBURG, PA. ALL INTERNATIONAL RIGHTS RESERVED. AMP PRODUCTS MAY BE COVERED BY U.S. AND FOREIGN PATENTS AND/OR PATENTS PENDING.

LOC	DIST
OF	EO

REVISIONS

P	F	ZONE	LTR	DESCRIPTION	DATE	APPROVED
V			E	ECO-10-006256 PY	4-10	DM

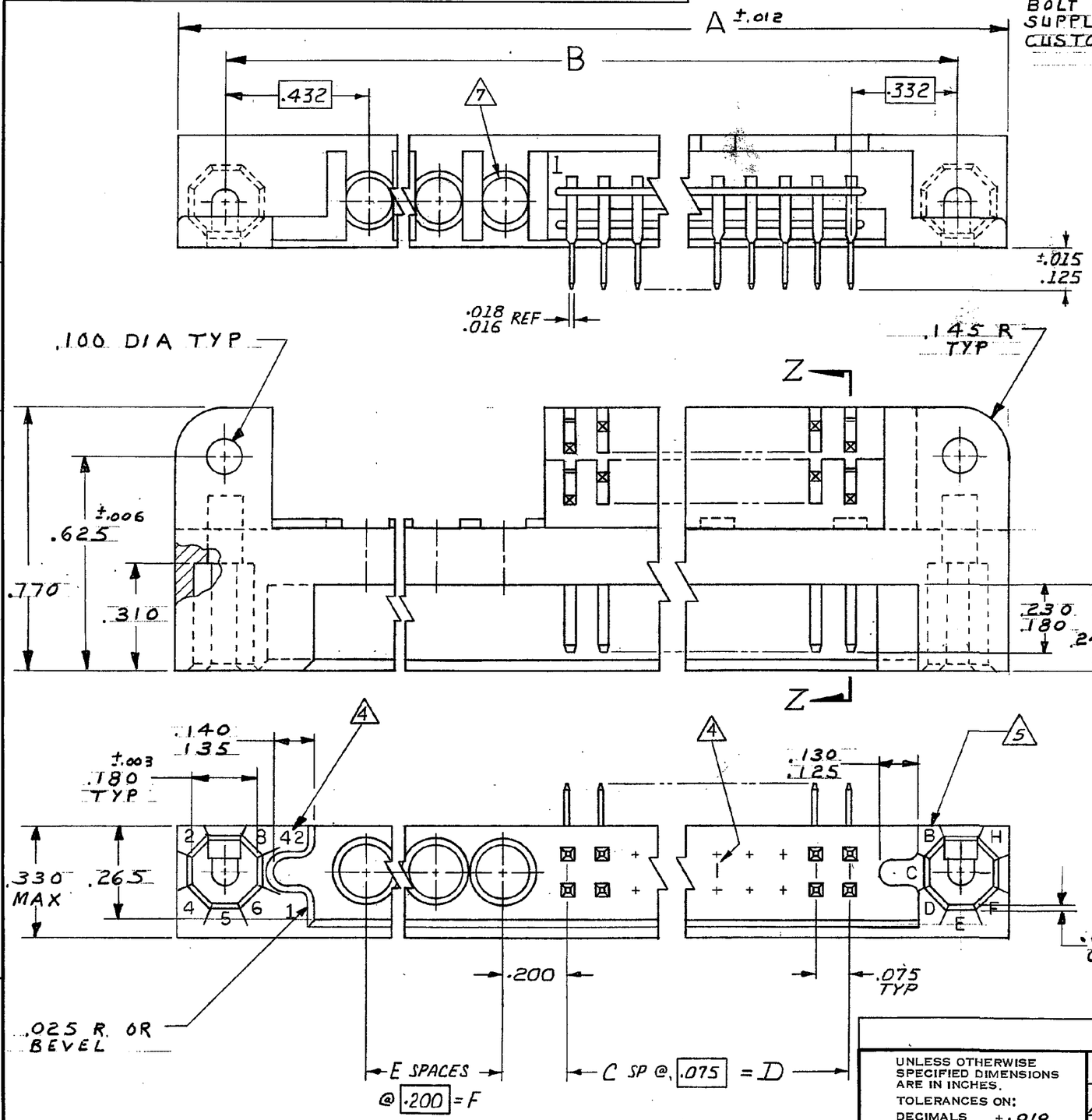

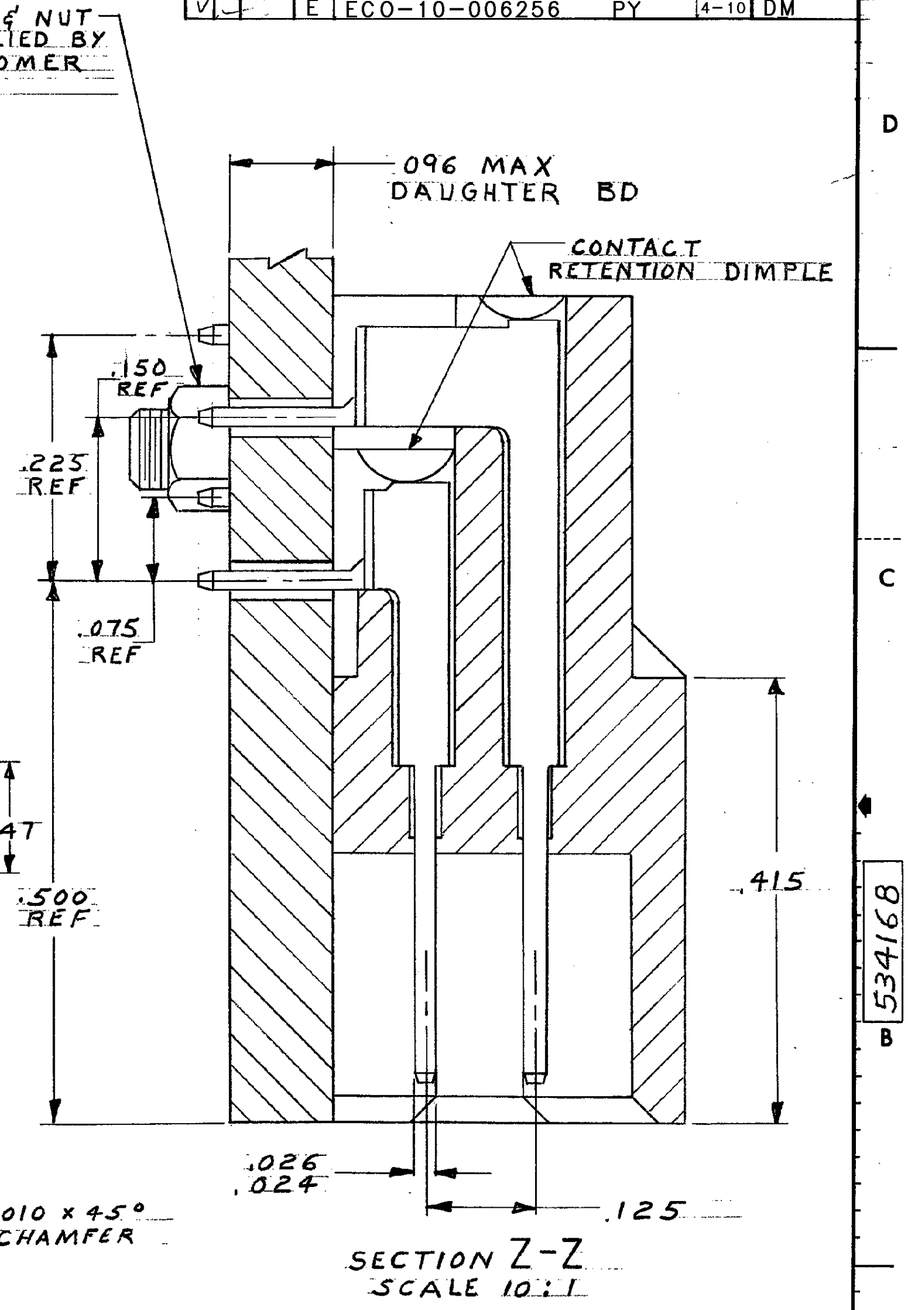

SECTION Z-Z
SCALE 10:1

534168

PART NO

UNLESS OTHERWISE SPECIFIED DIMENSIONS ARE IN INCHES.
TOLERANCES ON:
DECIMALS ±.010
ANGLES ±

MATERIAL 2 3

FINISH 3

CONTRACT NO

DR M. Smith 8-30-85
CHK E.H.McDonald 1-30-86
APPD E.E.McDonald 1-30-86
APPD L. Griffith 1/30/86
DSGN APPD
OTHER APPD

AMP | AMP INCORPORATED Harrisburg, Pa. 17105

NAME BOX PIN HDR ASSY, RGT ANGLE, .075 x .125 ℄, 751 ECONOMY SERIES, W/ MULTI-COAX POSN

SIZE	FSCM NO	DRAWING NO	REV
C	00779	534168	E

SCALE 4:1 SHEET 1 of 2

AMP 1471-6 REV 2-81

CUSTOMER DRAWING

DRAWING MADE IN THIRD ANGLE PROJECTION

THIS DRAWING IS UNPUBLISHED. RELEASED FOR PUBLICATION , 19 .

© COPYRIGHT 19 BY AMP INCORPORATED, HARRISBURG, PA. ALL INTERNATIONAL RIGHTS RESERVED. AMP PRODUCTS MAY BE COVERED BY U.S. AND FOREIGN PATENTS AND/OR PATENTS PENDING.

LOC	DIST
DF	FO

REVISIONS

P	F	ZONE	LTR	DESCRIPTION	DATE	APPROVED
				SEE SHEET 1		

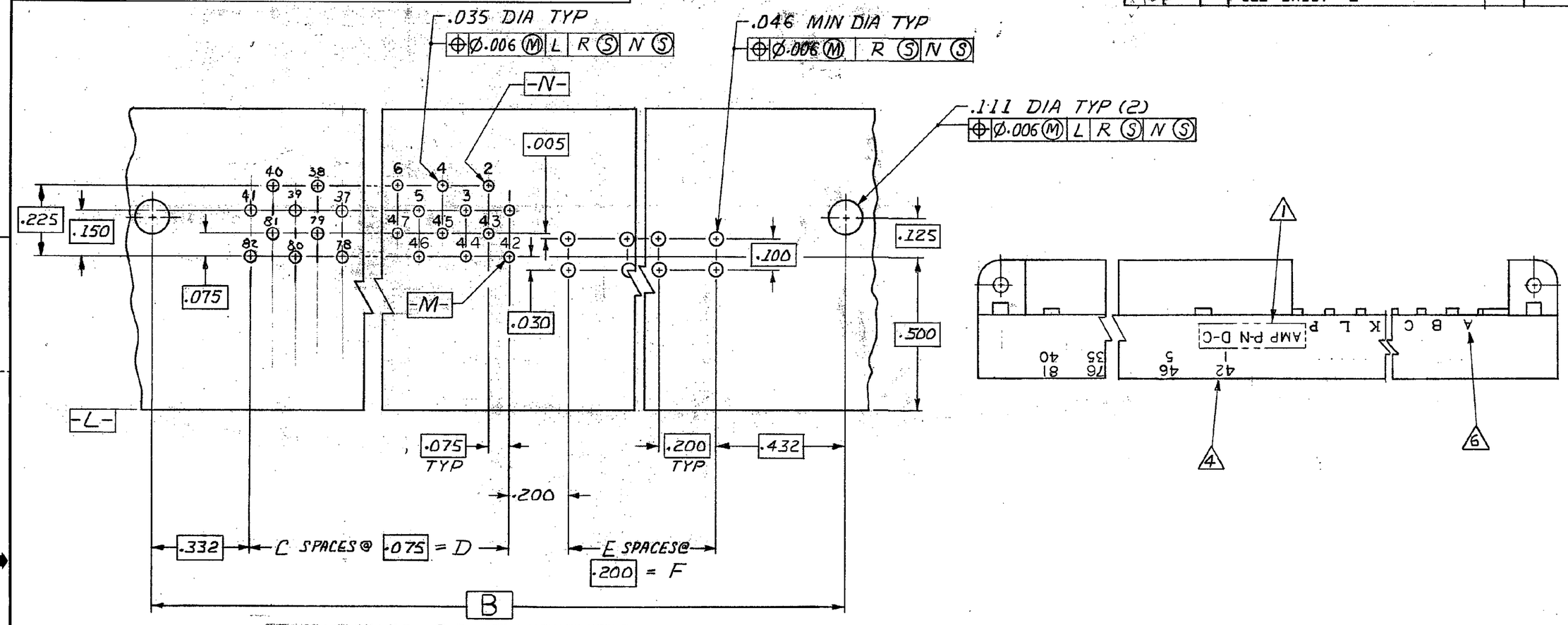

RECOMMENDED P.C. BD LAYOUT
(CONNECTOR SIDE)

1. AMP, TE PART NUMBER AND DATE CODE MARKED IN THIS AREA
2. HOUSING: POLYETHYLENE TEREPHTHALATE, COLOR-BLUE.
3. CONTACT: BRASS
   FINISH: .000030 GOLD OVER .000050 NICKEL IN CONTACT
   CONTACT AREA, TIN-LEAD PLATE OVER NICKEL ON SOLDER TAILS.
4. NUMBERS AND LINES INDICATING EVERY 5 CAVITIES MARKED ON MATING FACE, NUMBERS INDICATING EVERY 5 CAVITIES MARKED ON SIDE
5. KEY POSITION IDENTIFICATION MOLDED ON SURFACE SHOWN
6. COAX POSITIONS (A, B, C, D, E, F, G, H, J, K, L & P) ARE MARKED ON THIS SIDE ONLY
7. WILL ACCEPT MICRO-MINIATURE COAX CONTACT, AMP P/N 227602-1 AND 227604-1. INSERT COAX CONTACT P/N 227602-1 FROM THIS SIDE BEFORE MOUNTING TO P.C. BD.

F	E	D	C	B	A	NO. BOX POSN	PART NO
1.200	6	4.050	54	6.214	6.504	110	534168-2
2.200	11	3.000	40	6.164	6.454	82	534168-1

UNLESS OTHERWISE SPECIFIED DIMENSIONS ARE IN INCHES.
TOLERANCES ON:
DECIMALS ±.010
ANGLES ±

MATERIAL —

FINISH —

CONTRACT NO

DR M. Smith 9-3-85
CHK E.A. McDougle 1-30-86
APPD E.J. McDougle 1-30-86
APPD [signature] 1/30/86
DSGN APPD
OTHER APPD

AMP | AMP INCORPORATED Harrisburg, Pa. 17105

NAME BOX PIN HDR ASSY, RGT ANGLE, .075 x .125 ℄, 751 ECONOMY SERIES, W/ MULTI-COAX POSN

SIZE	FSCM NO	DRAWING NO	REV
C	00779	534168	E

SCALE 4:1 SHEET 2 OF 2

534168

AMP 1471-6 REV 2-81

CUSTOMER DRAWING