© – TE Connectivity. All Rights Reserved.

REVISIONS					
P	LTR	DESCRIPTION	DATE	DWN	APVD
	A3	BOTTOM SUPPORT BLOCK STRENGTHEN	24JUN2024	SS	JDB

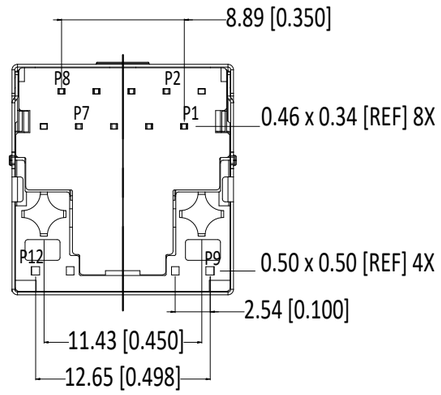

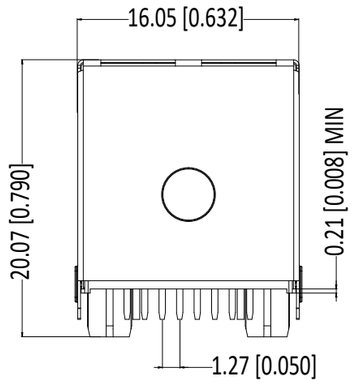

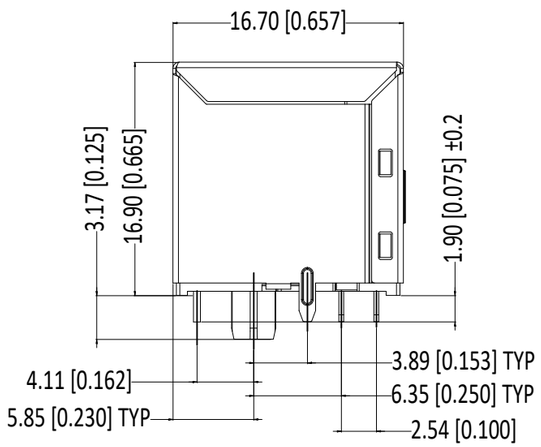

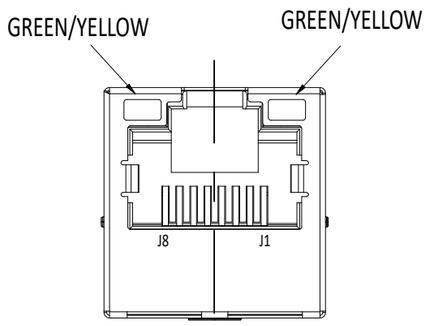

1 CONNECTOR MATERIAL:
HOUSING: LCP BLACK UL94 V-0
INSERT: LCP BLACK UL94 V-0
SHIELD: BRASS
SHIELD PLATING: NICKEL
CONTACT: COPPER ALLOY
CONTACT PLATING: SELECTIVE GOLD, MIN. 0.76µm (30µinch) IN CONTACT AREA OVER MIN. 1.27µm (50µinch) NICKEL
SOLDER PIN PLATING: 3.05µm (120µinch) TIN OVER 1.27µm (50µinch) NICKEL OVER ALL
SHIELDING PIN PLATING: NICKEL

2 PIN NOT ELECTRICALLY CONNECTED MAYBE OMITTED SEE ELECTRICAL CIRCUIT DIAGRAM FOR OMITTED PINS

3 RJ45 CAVITIY DIMENSION CONFORM TO FCC PART 68

4 THE PART IS RECOMMENDED FOR REFLOW SOLDERING PROCESS PEAK SOLDERING: TEMPERATURE MAX. +260°C, MAX. 10s

5 OPERATING TEMPERATURE: T= -40°C TO +85°C

6 STORAGE TEMPERATURE: T= -40°C TO +85°C

7 UNLESS OTHERWISE SPECIFIED, SEE TABLE FOR ALL DIMENSIONS TOLERANCES

8 JACK CONFIGURATION: 1 x 1
TAB DIRECTION: UP

9 PACKAGING: TRAY ACCORDING TO PACKAGING SPECIFICATION 107-18116

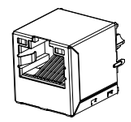

1:1

7 TABLE OF TOLERANCE (mm)

RANGE	TOLERANCE
0–10	±0.15
>10–40	±0.25
>40–70	±0.30
>70	±0.40

THIS DRAWING IS A CONTROLLED DOCUMENT.

DIMENSIONS: mm [INCHES]

TOLERANCES UNLESS OTHERWISE SPECIFIED: 7

0 PLC	± –
1 PLC	± –
2 PLC	± –
3 PLC	± –
4 PLC	± –
ANGLES	± –

MATERIAL 1

FINISH 1

DWN	GANESH C M	27AUG2016
CHK	FRANZ MUELLER	27AUG2016
APVD	MARTIN SZELAG	27AUG2016
PRODUCT SPEC	108-94552	
APPLICATION SPEC	114-94447	
WEIGHT	–	

TE Connectivity

NAME: RJ45 JACK INT.MAG. 10/100 LED 1x1 VERT

SIZE	CAGE CODE	DRAWING NO	RESTRICTED TO
A3	00779	C-5-2301995-3	–

CUSTOMER DRAWING

SCALE	SHEET	REV
3:1	1 OF 3	A3

© – TE Connectivity. All Rights Reserved.

REVISIONS					
P	LTR	DESCRIPTION	DATE	DWN	APVD
	–	SEE SHEET 1	–	—	—

SUGGESTED PCB LAYOUT

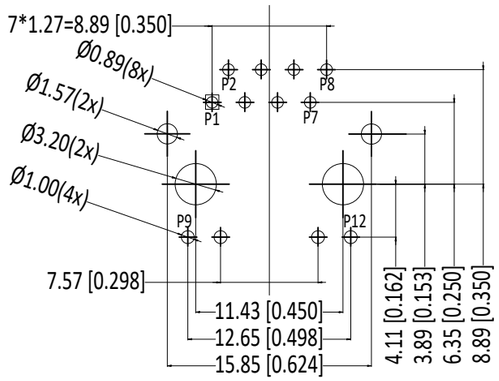

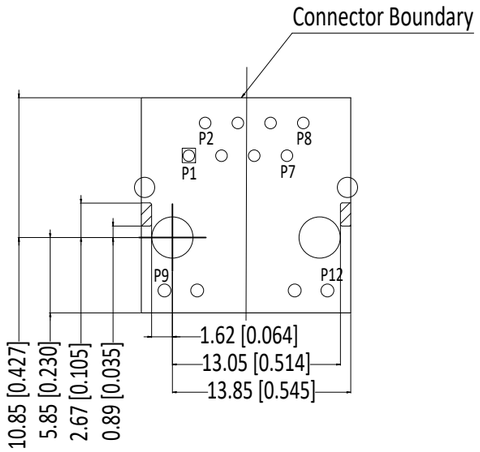

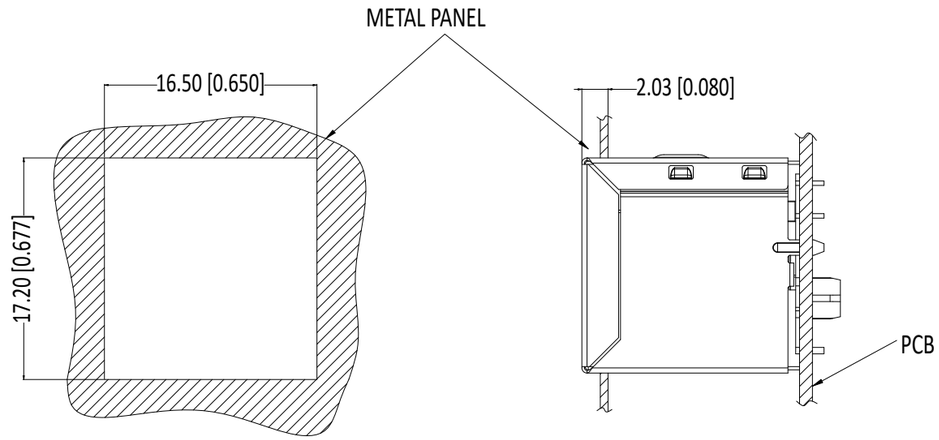

UNIT: mm / inch
TOLERANCES: ±0.10 / 0.004
ONLY FOR THIS VIEW

THIS DRAWING IS A CONTROLLED DOCUMENT.

DIMENSIONS: mm [INCHES]

TOLERANCES UNLESS OTHERWISE SPECIFIED:
0 PLC ± –
1 PLC ± –
2 PLC ± –
3 PLC ± –
4 PLC ± –
ANGLES ± –
7

MATERIAL 1

FINISH 1

DWN GANESH C M 27AUG2016
CHK FRANZ MUELLER 27AUG2016
APVD MARTIN SZELAG 27AUG2016
PRODUCT SPEC 108-94552
APPLICATION SPEC 114-94447
WEIGHT –

TE Connectivity

NAME RJ45 JACK INT.MAG. 10/100 LED 1x1 VERT

SIZE	CAGE CODE	DRAWING NO	RESTRICTED TO
A3	00779	C-5-2301995-3	—

CUSTOMER DRAWING

SCALE	SHEET	REV
3:1	2 OF 3	A3

© – TE Connectivity. All Rights Reserved.

REVISIONS					
P	LTR	DESCRIPTION	DATE	DWN	APVD
	–	SEE SHEET 1	–	—	—

ELECTRICAL CIRCUIT DIAGRAM

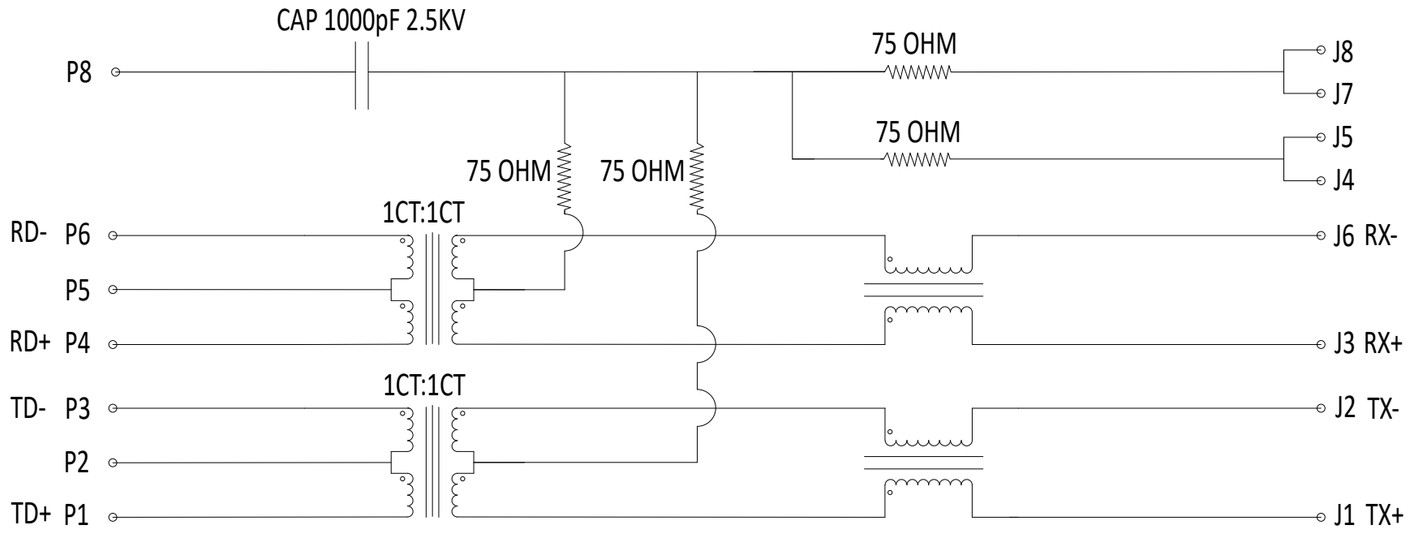

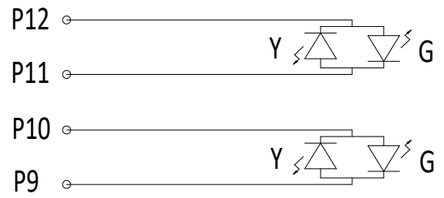

Pin	Yellow	Green	Pin	Yellow	Green
P12	–	+	P10	–	+
P11	+	–	P9	+	–

WIRE BONDED , V_F = 1.8V ~ 2.4V, I_F = 20mA

1. TURN RATIO @100KHz: (P1~P3):(J1~J2) = 1:1±2%
   (P4~P6):(J3~J6) = 1:1±2%
2. PRIMARY INDUCTANCE: 350uH MIN @100KHZ,0.1V 8mA DC BIAS
3. DC RESISTANCE: 1.2 OHMS MAX
4. INSERTION LOSS: 1-100MHz -1.2dB MAX
5. RETURN LOSS: 1-30MHz -16dB MIN. (@30MHz -17.0dB TYP)
   30-60MHz -16dB+20log(f/30MHz) MIN.
   (@60MHz -13.0dB TYP)
   60-80MHz -10dB MIN. (@80MHz -11.0dB TYP)
6. CROSS TALK: 1-100MHz -30dB MIN.
7. COMMON TO COMMON MODE ATTENUATION: 1-100MHz -30dB MIN.
8. ISOLATION: PHY SIDE TO LINE SIDE: 2250VDC

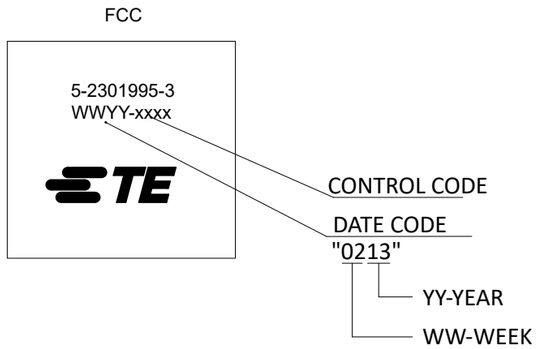

THIS DRAWING IS A CONTROLLED DOCUMENT.

DIMENSIONS: mm [INCHES]

TOLERANCES UNLESS OTHERWISE SPECIFIED:
0 PLC ± –
1 PLC ± –
2 PLC ± –
3 PLC ± –
4 PLC ± –
ANGLES ± –
7

MATERIAL 1

FINISH 1

DWN	GANESH C M	27AUG2016
CHK	FRANZ MUELLER	27AUG2016
APVD	MARTIN SZELAG	27AUG2016
PRODUCT SPEC	108-94552	
APPLICATION SPEC	114-94447	
WEIGHT	–	

TE Connectivity

NAME: RJ45 JACK INT.MAG. 10/100 LED 1x1 VERT

SIZE	CAGE CODE	DRAWING NO	RESTRICTED TO
A3	00779	C-5-2301995-3	—

CUSTOMER DRAWING | SCALE 3:1 | SHEET 3 OF 3 | REV A3