Connector: RP-SMA Jack (Male Pin)		
Termination: Cable End Crimp		
Connector Part	Material	Finish
Body	Brass	Nickel
Nut	Brass	Nickel
Washer	Brass	Nickel
Pin/Support	Brass	Gold
Insulator/Spacer	PTFE	–
O-ring	Silicone Rubber	–
Heat Shrink	Polyolefin	Black

REVISIONS			
REV	DESCRIPTION	DATE	APPV
A	ADD HEAT SHRINK, NEW FRAME, REVISED STRIPPING INSTRUCT./DIMS	4/26/10	CJ
B	ADDED NEW TITLE BLOCK; UPDATED MATERIAL	11-JUL-12	BPM
C	UPDATED PIN MATERIAL FROM BeCu TO BRASS; UPDATED DIMENSION UNITS; ADDED SECOND SPECIFICATION SHEET		

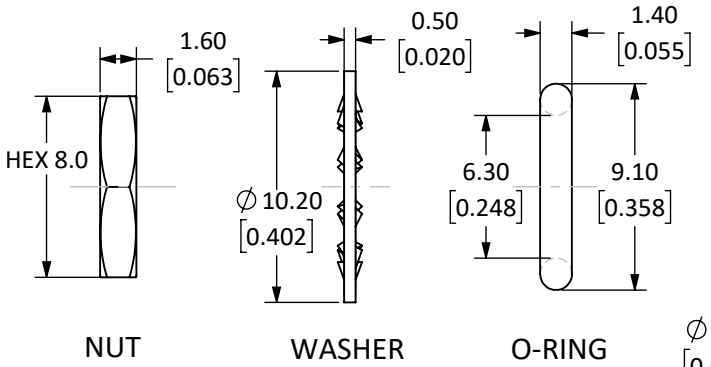

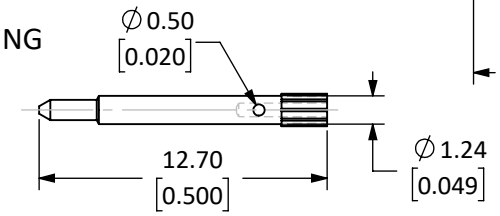

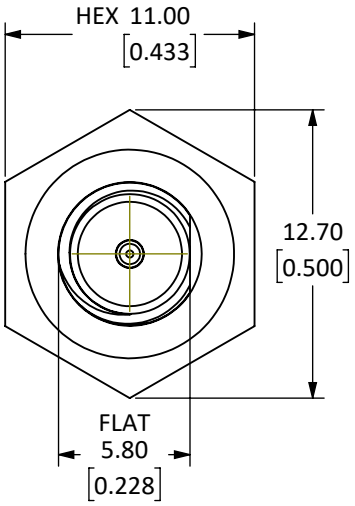

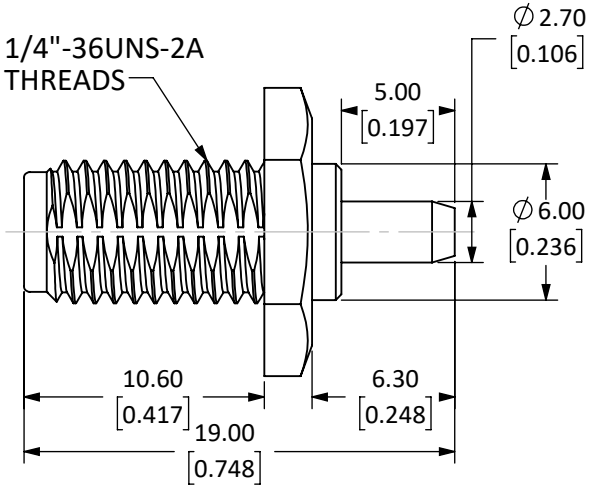

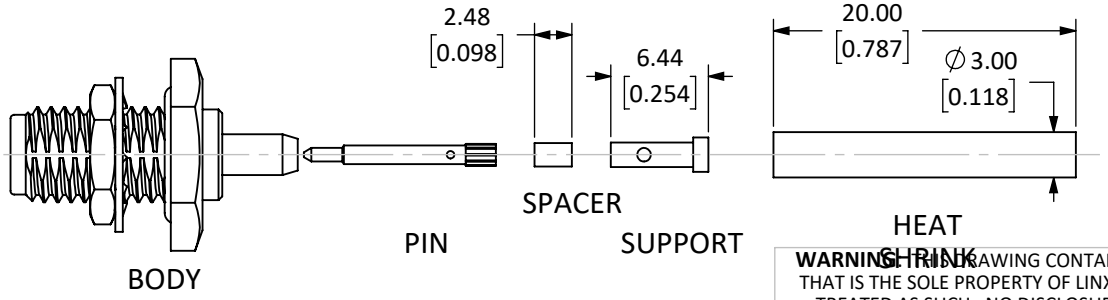

EXPLODED VIEW
SCALE 2 : 1

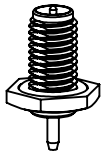

SCALE 1 : 1

NOTES: (UNLESS OTHERWISE SPECIFIED)

1. ALL DIMENSIONS ARE IN MILLIMETERS [INCHES].
2. DIMENSIONS APPLY AFTER FINISHING.
3. MANUFACTURE TO BE COMPLIANT WITH EU RoHS DIRECTIVE, USE MATERIALS THAT DO NOT CONTAIN REACH SUBSTANCES OF VERY HIGH CONCERN >1000ppm, AND USE DRC CONFLICT-FREE SOURCED MATERIALS.
4. SAFETY BREAK ALL SHARP CORNERS AND EDGES 0.5 MAXIMUM.
5. SEE TABLE I FOR ELECTRICAL SPECIFICATIONS. (SHEET 2)
6. SEE TABLE II FOR ENVIRONMENTAL SPECIFICATIONS. (SHEET 2)
7. SEE TABLE III FOR MECHANICAL SPECIFICATIONS. (SHEET 2)

WARNING: THIS DRAWING CONTAINS PROPRIETARY INFORMATION THAT IS THE SOLE PROPERTY OF LINX TECHNOLOGIES, AND SHALL BE TREATED AS SUCH. NO DISCLOSURE OR REPRODUCTION OF THIS DOCUMENT IS PERMITTED, IN WHOLE OR IN PART, WITHOUT THE EXPRESS WRITTEN PERMISSION OF LINX TECHNOLOGIES OR ITS DESIGNATED AGENTS.

MATERIAL:

INTERPRET DIMENSIONS AND TOLERANCES PER ASME Y14.5.
.X ±.1
.XX ±.01
.XXX ±.005
ANGLES: ±1°
SURFACE: 32

PROJECTION:

FINISH:

DRAWN: CJ DT: 4/26/10

ENGR: DT:

159 ORT LANE
MERLIN, OR 97532

TITLE:
RP-SMA BULKHEAD MOUNT JACK
FOR RG-178 CABLE W/HARDWARE

SIZE A | DWG. NO. C-CONREVSMA014-R178 | REV C

SCALE: 3:1 | DO NOT SCALE DRAWING | SHEET 1 OF 2

LDCFDAL_C

5 TABLE I

Electrical Data	Detail
Impedance	50 Ω
Frequency Range	0 to 6 GHz
Insulation Resistance	5000 M Ω min.
Voltage Rating	1000 V RMS
Contact Resistance	Center: ≤ 3.0 m Ω Outer: ≤ 2.5 m Ω
VSWR: f (GHz)	RG-178/U, or Equivalent 1.20+0.025f
Working Voltage	RG-178, or Equivalent → 250 volts rms max.
Dielectric withstanding Voltage	RG-178, or Equivalent → 500 volts rms max.
Insertion Loss	0.04 dB max. x √f GHz (straight)

6 TABLE II

Environmental Data	Detail
Corrosion (Salt spray)	ASTM B-117
Thermal Shock	MIL-STD-202 Method 107 test condition B
Vibration	MIL-STD-202 Method 204 test condition D
Mechanical Shock	MIL-STD-202 Method 213 test condition I
Temperature Range	-55 °C to +155 °C
Environmental Compliance	RoHS

7 TABLE III

Mechanical Data	Detail
Mounting Type	Bulkhead Rear-mount, With O-ring
Fastening Type	1/4"-36 Threaded Coupling
Recommended Torque	0.57 N·m (5.0 in·lbs)
Coupling Nut Retention	60 lbs. min.
Connector Durability	500 cycles min.
Weight	3.6 g (0.13 oz)

ASSEMBLY INSTRUCTIONS

1. Strip the cable to the recommended dimensions.
2. Slide heat shrink onto stripped cable.
3. Slide the coax into the support until the outside insulation bottoms out against the inside shoulder of the support.
4. Solder the support onto the braid.
5. Place the spacer onto the center-conductor.
6. Solder or crimp the socket onto the center conductor.
7. Insert the pin, center-conductor, spacer and support into the body until the top of the pin is flush to the end of the body.
8. Crimp the tail of the body onto the support with a 0.093" hex crimp tool.
9. Use heat shrink to cover crimp.

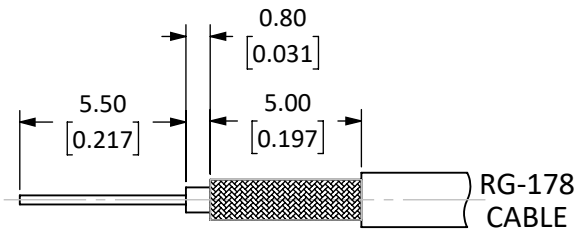

RECOMMENDED CABLE STRIPPING DIMENSIONS
CAN ALSO BE USED WITH:
RG-196

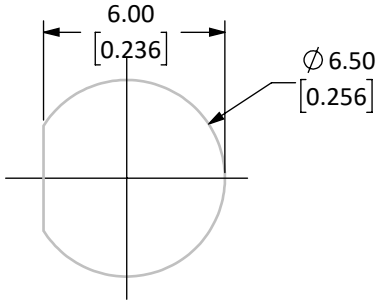

RECOMMENDED MOUNTING HOLE

SIZE	DWG. NO.	REV
A	CONREVSMA014-R178_C	C
SCALE: 4:1	DO NOT SCALE DRAWING	SHEET 2 OF 2