CUSTOMER DRAWING		
CATALOG #	4EHZ1	
ECN#	APPRVD	DATE
10-023669	PJO	B

SAFETY ORGANIZATIONS

THIS FILTER HAS BEEN FORMALLY RECOGNIZED, CERTIFIED OR APPROVED BY THE LISTED AGENCY. THEREFORE, ALL TEST/REQUIREMENTS SPECIFIED IN THE LATEST REVISION OF THE FOLLOWING AGENCY STANDARDS HAVE BEEN MET:

UL RECOGNIZED: UL 1283
CSA CERTIFIED: CSA C22.2 No. 8
VDE APPROVED: EN 60939-2

OPERATING SPECIFICATIONS

LINE CURRENT/VOLTAGE: 4 AMP, 120/250 VAC.

LINE FREQUENCY: 50-60Hz

MAXIMUM LEAKAGE CURRENT,
EACH LINE TO GROUND: 2µA @ 120V 60Hz
5µA @ 250V 50Hz

OPERATING AMBIENT TEMP. RANGE: -10°C TO +40°C @ RATED CURRENT, I_r.

IN AN AMBIENT, T_a, HIGHER THAN 40°C, THE MAXIMUM OPERATING CURRENT, I_o, IS AS FOLLOWS: $I_o = I_r \sqrt{\frac{85 - T_a}{45}}$

RELIABILITY SPECIFICATIONS:

STORAGE TEMPERATURE: -40°C TO +85°C
HUMIDITY: 21 DAYS @ 40°C 95% RH.
CURRENT OVERLOAD TEST: 6 TIMES I_r FOR 8 SECONDS

TEST SPECIFICATIONS:

INDUCTANCE: 7.0 mH NOMINAL
CAPACITANCE: (MEASURED @ 1KHz, 0.250VAC MAX., 25°C±1°C)

LINE TO LINE: .74 µF±20%
DISCHARGE RESISTOR: 470K Ω
L/G AND L/L I.R.
NO DISCHARGE RESISTOR: 6000MΩ (MIN.) @ 100VDC, 20°C AND 50% RH

RECOMMENDED RECEIVING INSPECTION HIPOT:

LINE TO GROUND: 1500 VAC FOR 1 MINUTE
LINE TO LINE: 1450 VDC FOR 1 MINUTE

FILTER APPROVAL:

THE BEST WAY TO SELECT AND QUALIFY A FILTER IS FOR YOUR ENGINEERING TO TEST THE UNIT IN YOUR EQUIPMENT.

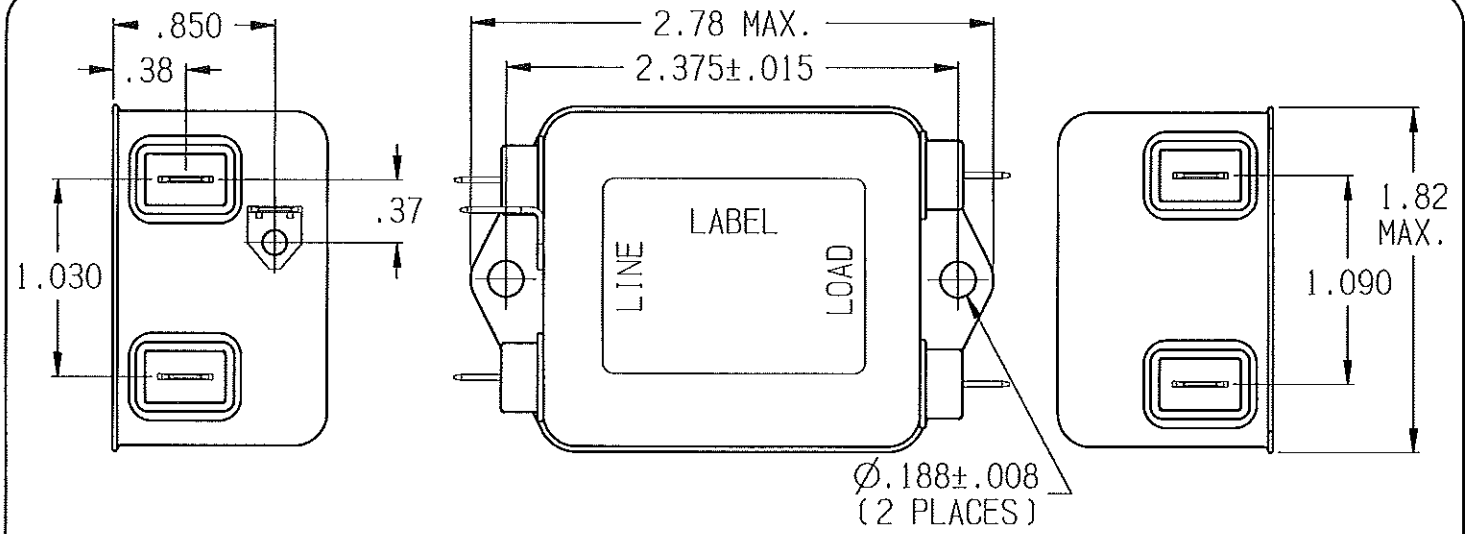

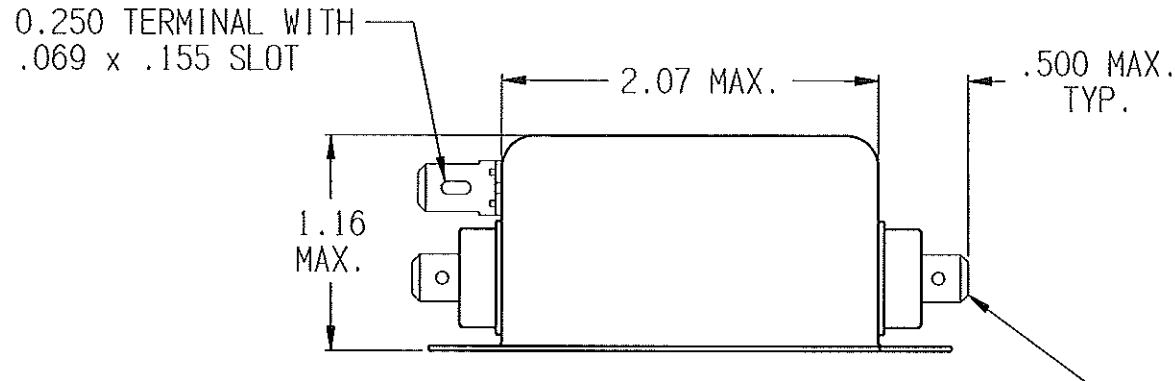

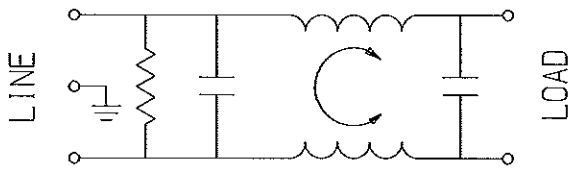

50Ω - 50Ω (MINIMUM) INSERTION LOSS												
FREQUENCY MHz	.01	.05	.1	.15	.5	1.0	2.0	5.0	10	20	30	/
COMMON dB	12	24	31	35	47	47	39	30	25	20	18	/
DIFF. dB	/	/	14	32	72	83	76	68	63	60	30	/

PARTS SHALL COMPLY WITH TYCO ELECTRONICS 138-702 SPECIFICATION FOR HAZARDOUS SUBSTANCES

UNLESS OTHERWISE SPECIFIED
TOLERANCE TO BE ±0.025
MATERIAL & FINISH: AS SUPPLIED

NOTES:

TE Connectivity

POWER LINE FILTER

TYCO ELECTRONICS PART NO. 2-1609037-8

SCALE:	DATE:	DRAWING NUMBER:	REV.
1:1	31AUG10	4EHZ1	B
DRV. BY: LJO	DRTG: PJO		

SHEET SIZE: A
THIRD ANGLE PROJECTION

THIS INFORMATION IS CONFIDENTIAL AND PROPRIETARY TO TYCO ELECTRONICS CORPORATION AND ITS WORLDWIDE SUBSIDIARIES AND AFFILIATES. IT MAY NOT BE DISCLOSED TO ANYONE OTHER THAN TYCO ELECTRONICS PERSONNEL, WITHOUT WRITTEN AUTHORIZATION FROM TYCO ELECTRONICS CORPORATION. HARRISBURG, PENNSYLVANIA USA.

4EHZ1-B.ckd