REV	DTHD06-1-8S
A	

REVISIONS			
SYM	DESCRIPTION	DATE	APPROVED
NC	NEW RELEASE PER E.O. A14636	12-6-94	R.D.R.
A	REVISED PER E.O. P18602	6-29-04	RDR

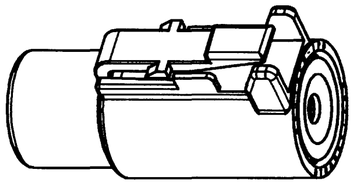

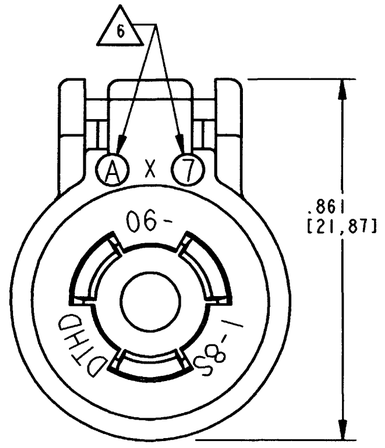

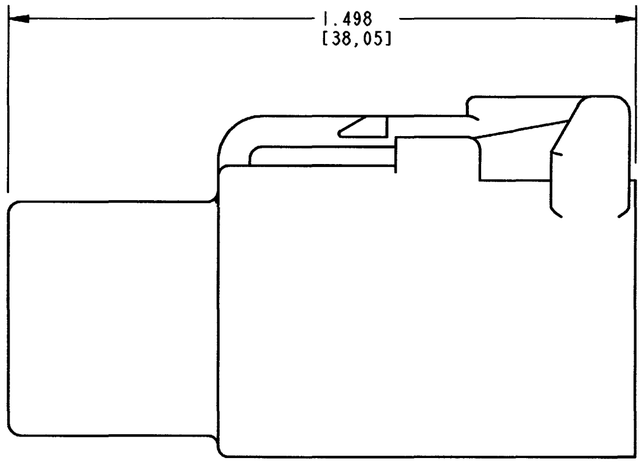

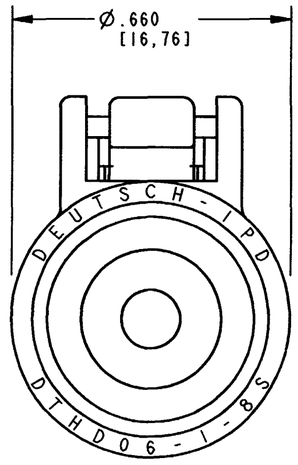

6 DATE CODE: MONTH IS REPRESENTED BY SEQUENTIAL ALPHA CHARACTERS. EX: A = JANUARY.
YEAR IS REPRESENTED BY LAST NUMERIC DIGIT. EX: 2 = 2002.

5 MATERIAL: HOUSING: PLASTIC, GROMMET: RUBBER.

4 THIS PLUG MATES WITH DTHD04-1-8P-**** RECEPTACLE.
(**** = ALL MODIFICATIONS)

3 FOR CONTACT AND WIRE PERFORMANCE AND APLICATION CHARACTERISTIC SEE ENVELOPE DRAWING 0425-015-0000.

2 DIMENSION TOLERANCE: ±.025 [.64].

1 DIMENCIONS ARE IN INCHES [mm].

NOTES: UNLESS OTHERWISE SPECIFIED.

WIRE INSULATION DIA			
CONTACT SIZE	MINIMUM O.D.	MAXIMUM O.D.	WIRE RANGE [mm^2] REF. ONLY 4
8	.190 [4.83]	.240 [6.09]	8 - 10 AWG [8.0-5.0]

	SIGNATURE & DATE
DR	V. TOWSA JUN-8-94
CHK	
PE	Vladimir Tomov JUN-10-04
APPD	D Meyer 6/21/04
SCALE	4:1 WT

PLUG
#8 HD CONTACT
DTHD SERIES
COLOR BLACK

ENVELOPE

CP | MATL. CODE

The Deutsch Company
DEUTSCH I.P.D.
3850 INDUSTRIAL AVE.
HEMET, CALIF. 92545

B | DTHD06-1-8S

DWG SIZE | CODE 11139 | SHEET 1 OF 1