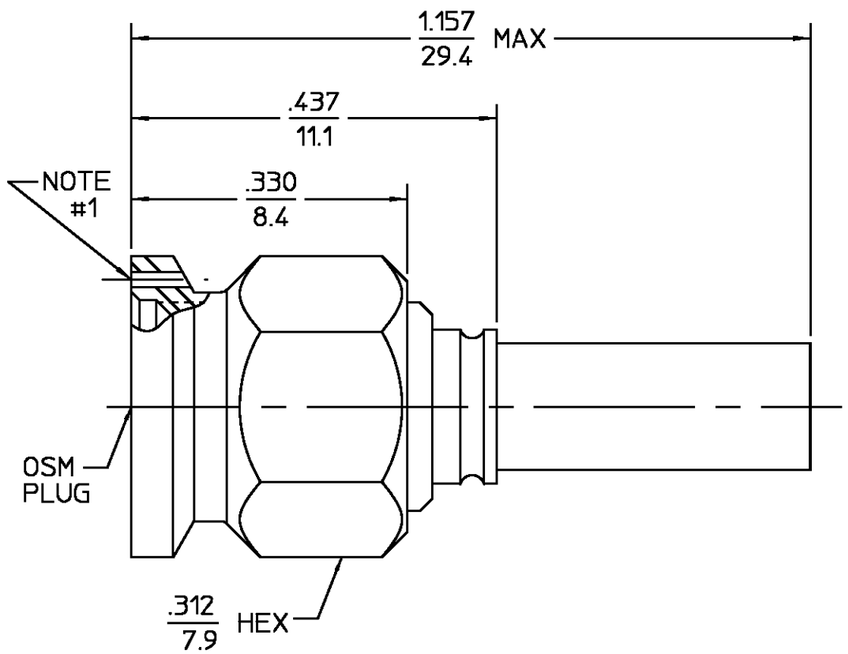

DESIGNED FOR USE WITH RG-174/U OR EQUIVALENT	
CABLE ENTRY DIAMETER MINIMUM	
CONTACT	.021
HOUSING	.065
FERRULE	.125

REVISIONS			
REV	DESCRIPTION	DATE	APPROVED
01_0	RELEASED	11/5/96	

NOTES:
1. Ø.018 LOCKWIRE HOLE, 3 PLACES, EQ. SPACED

COMPONENT	MATERIAL	FINISH
COUPLING NUT HOUSING	STAINLESS STEEL PER ASTM-A484 AND ASTM-A582, TYPE 303	PASSIVATE PER QQ-P-35
DIELECTRIC	TFE FLUOROCARBON PER ASTM-D-1457	N/A
CENTER CONTACT	BERYLLIUM COPPER PER ASTM-B-196 OR ASTM-B-197, ALLOY C17300, CONDITION H	GOLD PLATE PER MIL-G-45204
RETAINING RING	BERYLLIUM COPPER PER ASTM-B-194, ALLOY C17200, CONDITION H	N/A
GASKET	SILICONE RUBBER PER ZZ-R-765	N/A
FERRULE	COPPER OR BRASS ALLOY ROCKWELL F65 MAXIMUM	GOLD PLATE PER MIL-G-45204

ELECTRICAL	MECHANICAL	ENVIRONMENTAL
Nominal Impedance (Ohms) 50	Interface Dimensions MIL-STD-348A, Fig. 310.1	Temperature Rating -65°C to +165°C
Frequency Range (GHz) DC to 12.4	Recommended Mating Torque 7 - 10 in-lbs	Vibration MIL-STD-202, Method 204, Condition D.
Volt Rating (VRMS MAX) @ Sea Level 250	Mating Characteristics: Insertion (MAX Lbs) N/A	Shock MIL-STD-202, Method 213, Condition I.
VSWR 1.15 + .02 f(GHz)	Withdrawal (MIN Oz) N/A	Thermal Shock MIL-STD-202, Method 107, Condition B, Except High Temp 85°C
Insertion Loss (dB MAX) $.06\sqrt{f(GHz)}$	Force to Engage and Disengage (In-Lbs MAX) 2.0	Moisture Resistance MIL-STD-202, Method 106
RF Leakage (dB MIN) -60 @ 2-3 GHz	Center Contact Captivation: Axial (Lbs) 6.0	Corrosion - MIL-STD-202, Method 101, Condition B, 5% salt spray
Corona, 70,000 Ft (VRMS MIN) 190	Radial (In-Oz) N/A	
Dielectric Withstanding Voltage (VRMS MIN) @ Sea Level 750	Cable Retention: Axial Force (Lbs MIN) 20	.XXX = in
Contact Resistance (Milliohms MAX): Center Contact 3.0	Torque (In-Oz) N/A	XX.X = mm (REF)
Outer Contact 2.0	Weight (Grams) TBD	
Cable to Housing 0.5		
RF High Potential @ Sea Level (VRMS MIN @ 5 MHz) 500		
I.R.(Megohms MIN) 5,000		

UNLESS OTHERWISE SPECIFIED DIMENSIONS ARE IN INCHES
TOLERANCE ON
FRAC. ± 1/64 DEC. ±.005 ANGLES ± 1°

DRAWN BY DATE 9/5/96
CHECKED BY
APP'D BY 11/5/96

These drawings and specifications are the property of M/A-COM Incorporated and shall not be reproduced or copied or used in whole or in part as the basis for the manufacture or sale of item(s) without written permission.

USE ASS'Y PROCEDURE

NO. A.P. 408-04936 (20-513)

AMP Incorporated
140 Fourth Avenue
Waltham, MA 02451-7599

TITLE OSM STRAIGHT CABLE PLUG CRIMP ATTACHMENT M39012/55-3012 CAT. B

SIZE	CODE IDENT NO.		REV
B	26805	2031-8012-92	01_0

SCALE 10 : 1 SHEET 1 OF 1

COPY IN PUERTO RICO

CUSTOMER DRAWING

AMP PART # 1051766-1
SHEET 1 OF 1 REV A