© 2024 TE Connectivity. All Rights Reserved.

REVISIONS					
P	LTR	DESCRIPTION	DATE	DWN	APVD
	D	RELEASE PER E.O. P20553	07/21/10	-	RDR
	E	REVISED PER E.O. P20766	01/21/11	-	RDR
	F	REVISED PER PCN-23-192205	05FEB2024	RK	CB
	F1	REVISED PER PCN-24-225053	01OCT2024	RK	CB

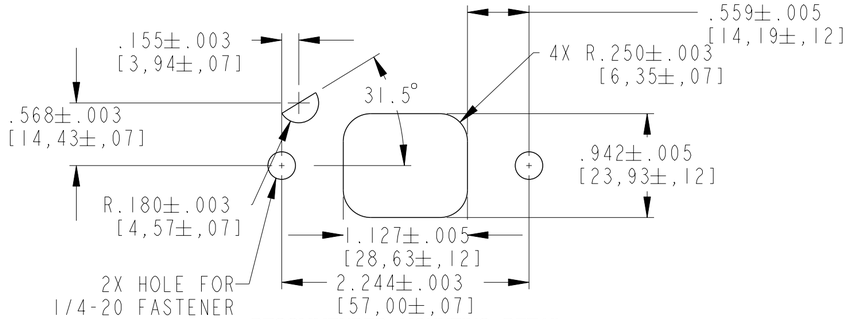

RECOMMENDED MOUNTING DETAIL

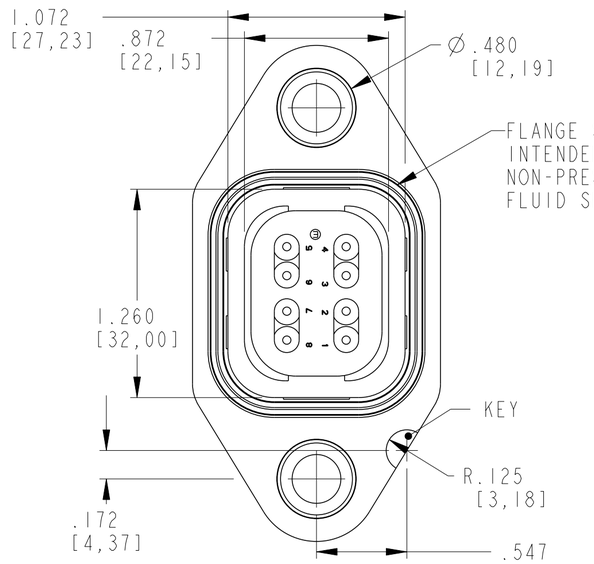

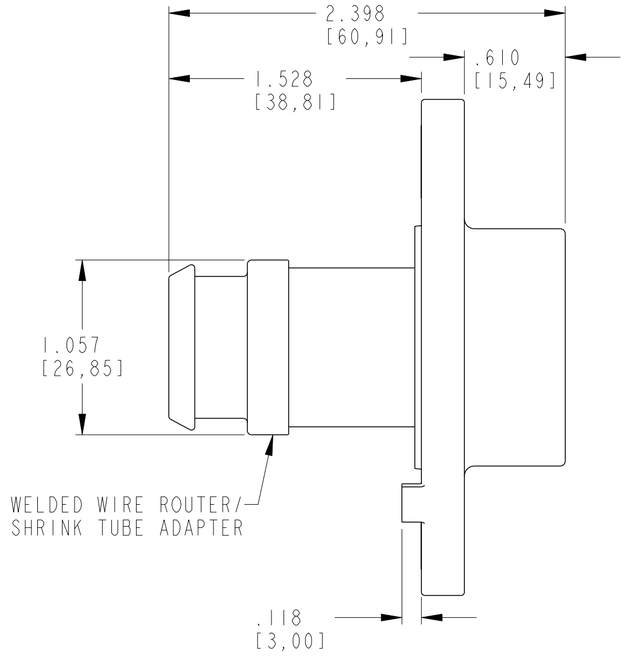

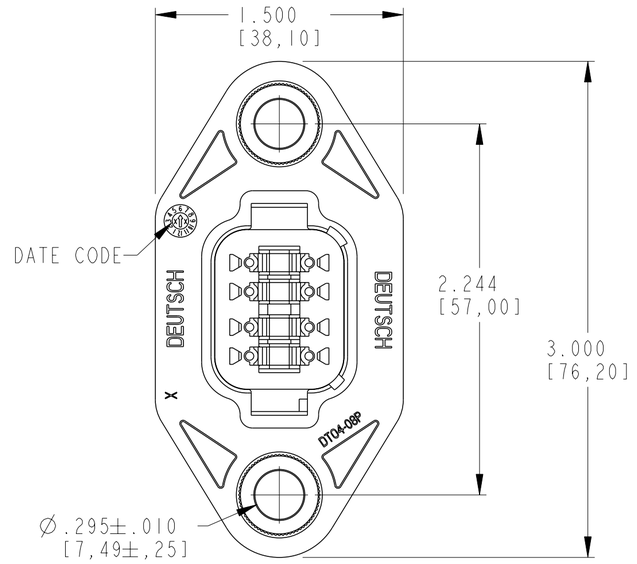

CONTACT SIZE	MIN. INSUL. O.D.	MAX. INSUL. O.D.	WIRE RANGE [mm²] REF ONLY △1
16	.088 [2.23]	.145 [3.68]	14-20 AWG (2.0-0.5)

△3 MATERIAL: SHELL: PA66 GF15 (GRAY)
WELD CAP: PA66 GF15 (BLACK)
GROMMET: VMQ (RED-ORANGE)
INSERTS: STAINLESS STEEL

2. THIS RECEPTACLE MATES WITH THE DT06-08SA-XXXX PLUG. (XXXX ALL MODIFICATIONS). CONSULT FACTORY FOR MODIFICATIONS.

△1 FOR CONTACTS AND WIRE PERFORMANCE AND APPLICATION CHARACTERISTICS SEE ENVELOPE DRAWING 0425-015-0000 AND 0425-017-0000.

THIS DRAWING IS A CONTROLLED DOCUMENT.

DIMENSIONS: IN [mm]

TOLERANCES UNLESS OTHERWISE SPECIFIED:
0 PLC ±-
1 PLC ±-
2 PLC ±-
3 PLC ±.025 [0.64]
4 PLC ±-
ANGLES ±-

MATERIAL △3

FINISH -

DWN S. THEIS	10/9/98
CHK -	1/2/2011
APVD -	1/14/11
PRODUCT SPEC	108-151009
APPLICATION SPEC	114-151009
WEIGHT	41g

TE Connectivity

NAME 8 WAY RECEPTACLE FLANGED CONNECTOR -LE03 MOD, DT SERIES -

SIZE	CAGE CODE	DRAWING NO	RESTRICTED TO
A2	00779	C⇨DT04-08PA-LE03	-

CUSTOMER DRAWING | SCALE 1.5: | SHEET 1 OF 1 | REV F1

printed on 4 Nov 2024 13:53 (Eastern Standard Time) from TE354946