SCALA NON IMPEGNATIVA (DO NOT SCALE)
DIMENSIONI IN / DIMENSIONS IN mm

METRIC

PROIEZIONE EUROPEA (EUROPEAN PROJECTION)

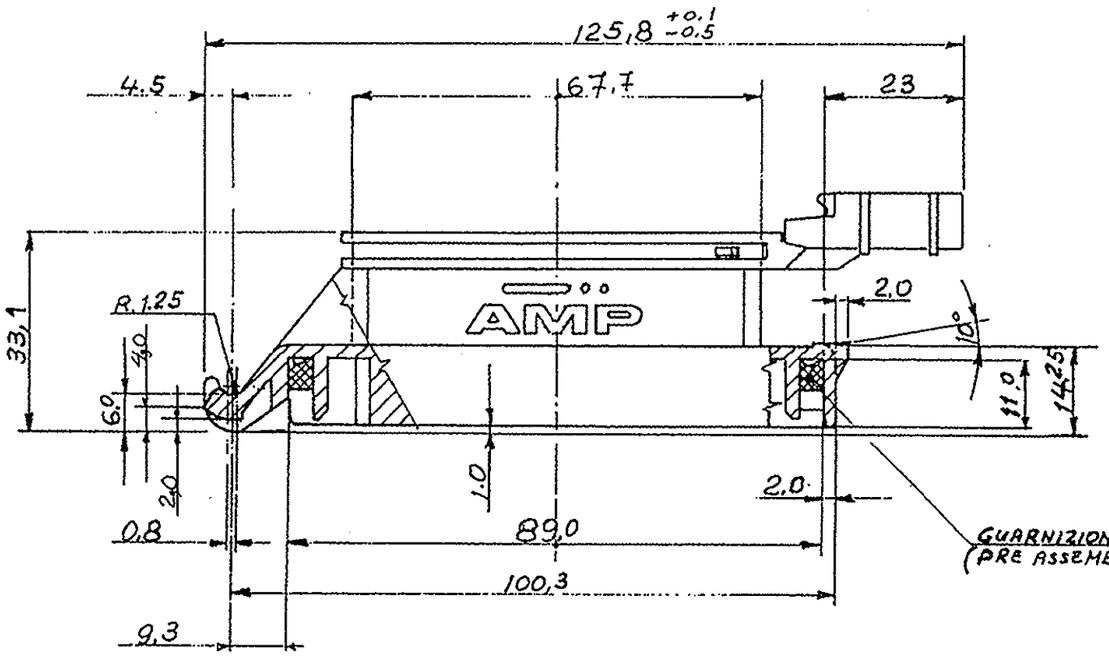

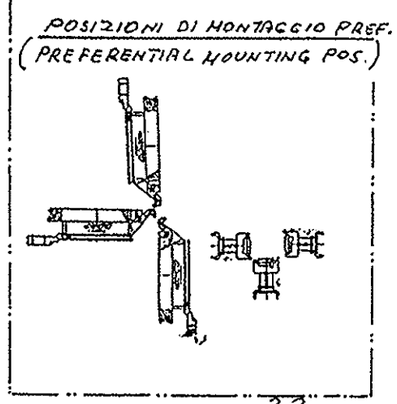

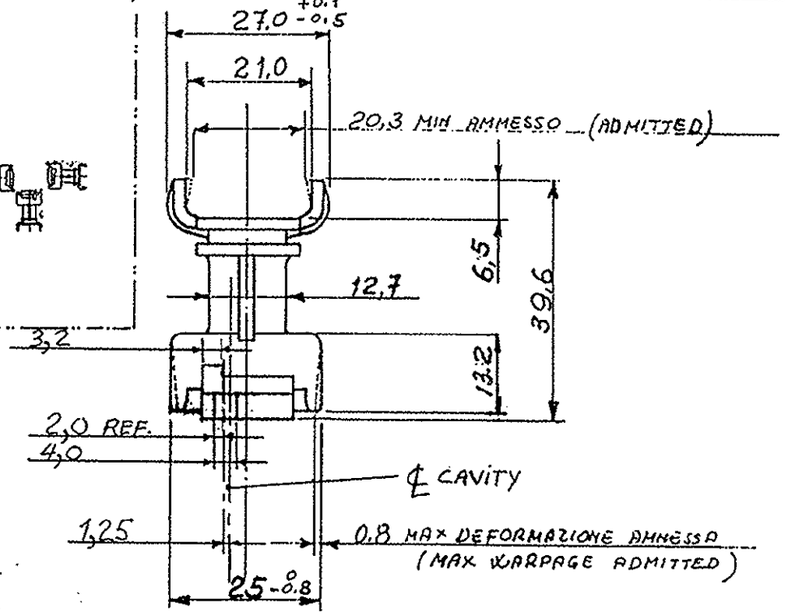

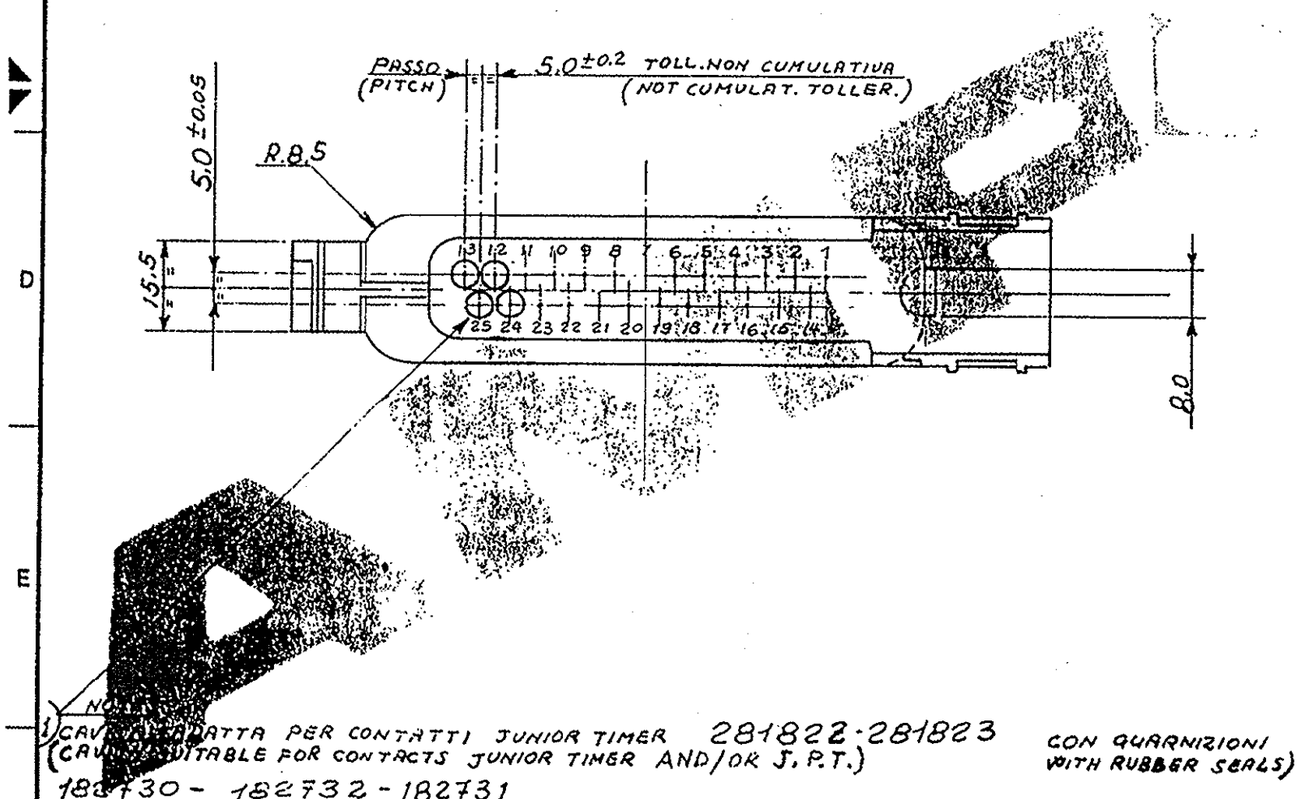

281810-2

PARTI NON QUOTATE IN COMUNE CON 281810-1 (PARTS WITHOUT DIM. ARE COMMON WITH 281810-1)

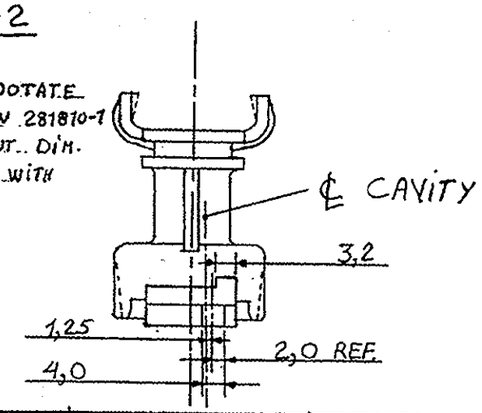

FINITURA / COLORE (FINISH / COLOUR)	MATERIALE (MATERIAL)	NUMERO (PART NUMBER)
NERO (BLACK)	PA.CARIC. (G.F. PA6.6)	281810-2
NERO (BLACK)	PA.CARIC. (G.F. PA 6.6)	281810-1

CUSTOMER DWG. FOR REFERENCE ONLY — **DISEGNO PER CLIENTE** SOLO PER RIFERIMENTO

THIS DRAWING IS UNPUBLISHED — RELEASE FOR PUBLICATION 19

© COPYRIGHT 19 BY AMP INCORPORATED, HARRISBURG, PA ALL INTERNATIONAL RIGHT RESERVED AMP PRODUCTS MAY BE COVERED BY U.S. AND FOREIGN PATENT AND/OR PATENT PENDING

TOLLERANZE: SE NON DIVERSAMENTE SPECIFICATO (TOLERANCES UNLESS OTHERWISE SPECIFIED) ± 0,3

ANGOLI (ANGLES) ± 2°

DIAM. ISOLANTE (INS. DIA. RANGE) —//—

RANGO FILO (WIRE RANGE) —//—

SCALA (SCALE) 1:1

AMP — AMP ITALIA S.p.A. Corso F.lli Cervi, 15 COLLEGNO (TORINO)

DIS. (DR.) 17 LUGLIO 1986

CONT. (CHK)

APP. (APP.)

DESCRIZIONE (DESCRIPTION) 25 POS. SPLASH PROOF CONN. FOR JUNIOR TIMER C. - 90° VERSION

LOC.	SIZE	NUMERO (DWG NO)	REV.	FOGLIO (SHEET)
I	A3	C - 281810	D	1 DI (OF) 2

REV.	REVISIONI (REVISION RECORD)	DIS. (DR)	DATA (DATE)
D	REVISED PER ET00-0035-04	P.Z. R.M.	04-3 2004
C	REVISED PER ET00-0251-02	P.Z. R.M.	10-02 2003
B	ADDED...-2 (RELEASED) ET00456-97		
A	PRELIMINARY FOR...-2		
6	REVISIONATO		22 MAR 88
5	REVISIONATO		22-6-87
4	REVISIONATO		12-3 87
3	Aggiorn. foglio 2		
2	N° DIS. ERA IA-86-5005		17-9 86
1	REVISIONATO E RIDISEGN.		17-7-86

1) NO[illegible]
CAV[illegible]ADATTA PER CONTATTI JUNIOR TIMER 281822-281823
(CAV[illegible]UITABLE FOR CONTACTS JUNIOR TIMER AND/OR J.P.T.)
182730 - 182732 - 182731

CON GUARNIZIONI WITH RUBBER SEALS)

AMP-ITA 7583 - 8/82

SCALA NON IMPEGNATIVA (DO NOT SCALE)
DIMENSIONI IN / DIMENSIONS IN mm
METRIC
PROIEZIONE EUROPEA (EUROPEAN PROJECTION)

100.3

SEZIONE A-A
(SECTION A-A)

Ø3.2 MAX

8.25 +0.15

1.3 ±0.4

2.2 +0.2 0

3.5 MAX

B

6.5 MIN.

R.

PROFILO OPZIONALE
(OPTIONAL PROF.)

15°

1.6 MAX

DETTAGLIO
SCALA 10:1

R. 3.7

16 +0.5 0

A

11.55

84.5 ±0.2

15.7 ±0.2

(AMP CONNECTOR)
CONNETTORE AMP
N° 827050

SEZIONE B-B
SECTION B-B

10.0

0.7 COSTANTE
(AROUND)

DIMENSIONI CONTROPARTE
(COUNTERPART DIMENSIONS)

AMP

REV. (REV. LTR)	REVISIONI (REVISION RECORD)	DIS. (DR)	DATA (DATE)
	SEE SHEET 1		
3	8.25 ±0,15 era 8.25 ±0,1	AMV	15/10/86

FINITURA / COLORE (FINISH / COLOUR)
MATERIALE (MATERIAL)
NUMERO (PART NUMBER)

CUSTOMER DWG.
FOR REFERENCE ONLY

DISEGNO PER CLIENTE
SOLO PER RIFERIMENTO

THIS DRAWING IS UNPUBLISHED
RELEASE FOR PUBLICATION 19

© COPYRIGHT 19 BY AMP INCORPORATED, HARRISBURG, PA ALL INTERNATIONAL RIGHT RESERVED AMP PRODUCTS MAY BE COVERED BY U.S. AND FOREIGN PATENT AND/OR PATENT PENDING

TOLLERANZE: SE NON DIVERSAMENTE SPECIFICATO (TOLERANCES UNLESS OTHERWISE SPECIFIED) ± 0,3
ANGOLI (ANGLES) ± 2°

DIAM. ISOLANTE (INS. DIA. RANGE)
RANGO FILO (WIRE RANGE)
SCALA (SCALE) 1:1

AMP ITALIA S.p.A.
Corso F.lli Cervi, 15
COLLEGNO (TORINO)

DIS. (DR.) 19-9-86
CONT. (CHK)
APP. (APP.)

DESCRIZIONE (DESCRIPTION) 25 POS. SPLASH PROOF (WITH-OUT SEAL) CONN. FOR JUNIOR TIMER C. 90° VERSION

LOC. 1 | SIZE A3 | NUMERO (DWG NO) C-281810 | REV. D | FOGLIO (SHEET) 2 DI (OF) 2

DISTRIBUZIONE (PRINT DIST.)