© 2024 TE Connectivity. All Rights Reserved.

REVISIONS					
P	LTR	DESCRIPTION	DATE	DWN	APVD
	B	REVISED PER PCN-23-192205	19APR2024	PS	CB
	K	REVISED PER PCN-24-210155	09SEP2024	AJ	CB
	L	REVISED PER PCN-25-236481	18JUN2025	AJ	MB

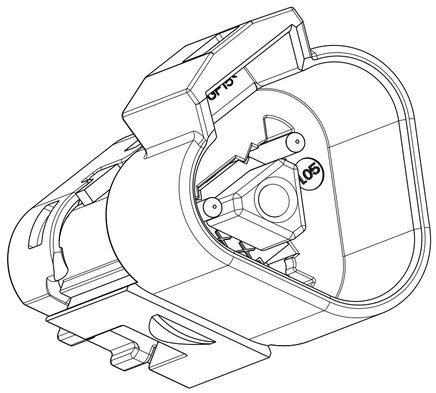

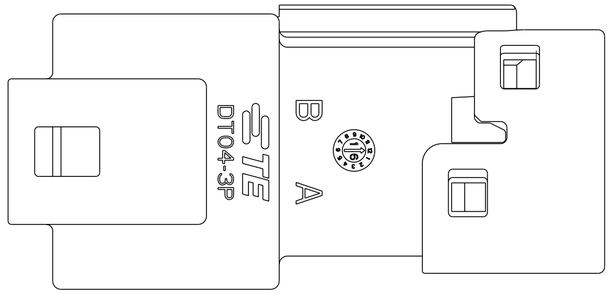

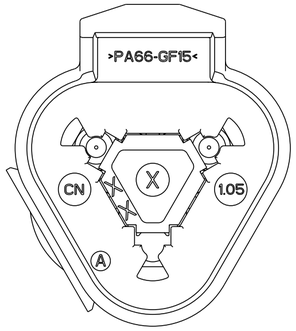

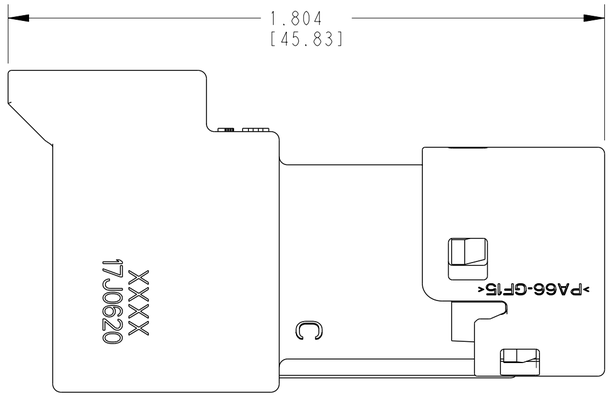

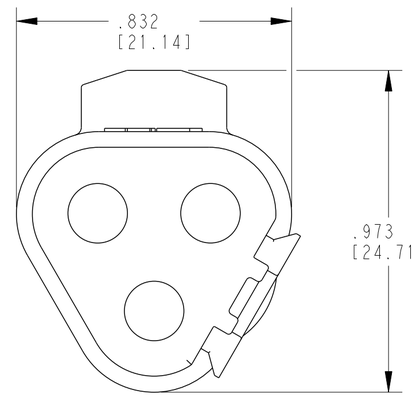

6 MADE IN; CHINA = CN, MEXICO = MX, INDIA = IN.

5 120 Ω RESISTOR IS INSERTED INTO CAVITIES A AND B RESISTOR CHARACTERISTICS:
120Ω ±10%, .4 WATTS MINIMUM.

4 MATERIAL: HOUSING/CAP: PA66 GF15, (GRAY)
CAP: PA66 GF15, (BLACK)
GROMMET: VMQ (RED-ORANGE)
FRONT SEAL: VMQ (RED-ORANGE)
WEDGE LOCK: PBT GF30 (BLUE)
PIN TERMINALS: COPPER ALLOY; GOLD PLATED

3. THIS RECEPTACLE MATES WITH THE DT06-3S-XXXX PLUG (XXXX = J1939 ALL MODIFICATIONS).
CONSULT FACTORY FOR MODIFICATIONS.

2. FOR CONTACTS AND WIRE PERFORMANCE AND APPLICATION CHARACTERISTICS
SEE ENVOLPOE DRAWING 0425-015-0000 AND 0425-017-0000.

1. SECONDARY WEDGE LOCK W3P-1939 IS KEYED AND INCLUDED
TO PREVENT MISMATING AND MAY NOT MATE WITH ALL 3 WAY DT
SERIES PLUGS.

NOTES:

TE INTERNAL PN	DEUTSCH PN
DT04-3P-P006	DT04-3P-P006

THIS DRAWING IS A CONTROLLED DOCUMENT.

DIMENSIONS: in [mm]

TOLERANCES UNLESS OTHERWISE SPECIFIED:
0 PLC ±
1 PLC ±
2 PLC ±
3 PLC ±.025 [0.64]
4 PLC ±
ANGLES ±1°

MATERIAL 4

FINISH -

DWN S.THEIS 07JUL1999
CHK S.THEIS 08JUL1999
APVD R.READ 13JUL1999
PRODUCT SPEC 108-151009
APPLICATION SPEC 114-151009
WEIGHT 9.20g

TE Connectivity

NAME 3 WAY RECEPTACLE, DT SERIES (TERMINATING RECEPTACLE) -P006 MOD

SIZE	CAGE CODE	DRAWING NO	RESTRICTED TO
A2	4AFU8	C-DT04-3P-P006	-

CUSTOMER DRAWING | SCALE 3:1 | SHEET 1 OF 1 | REV L