© 2025 TE Connectivity. All Rights Reserved.

CONNECTOR OVERALL DIMENSIONS WITH COVER KIT AND LEVER ASSEMBLED
(DIMENSIONI DI INGOMBRO CONNETTORE CON KIT COPERCHIO E LEVA MONTATI)

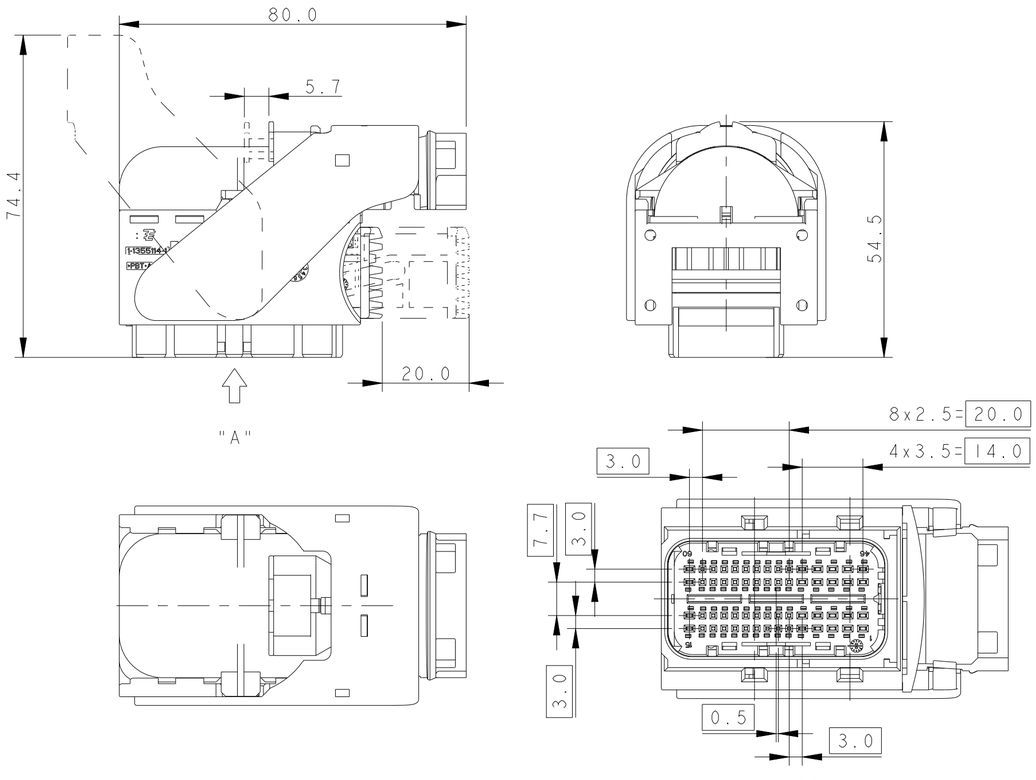

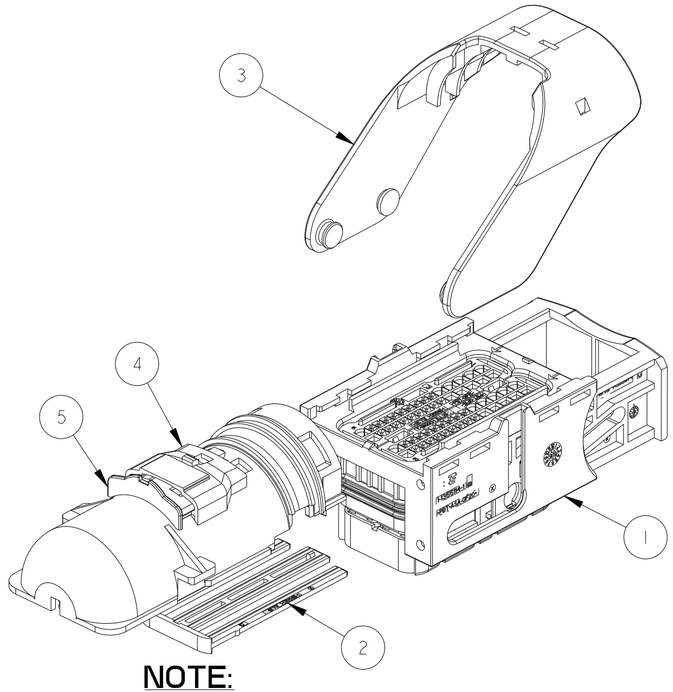

REVISIONS					
P	LTR	DESCRIPTION	DATE	DWN	APVD
	E3	ECR-12-016448	18SEP2012	M.P.	M.G.
	F	ECN-21-126823	17NOV2021	VN	VN
	F1	ECN-22-179551	17OCT2022	V.N.	V.N.
	G	REVISED PER ECN-25-309621	05MAR2025	V.N.	V.N.

P/N 284742-1 AS SHOWN
FIAT VERSION

HOUSING AS SUPPLIED
(CORPO CONNETTORE COME FORNITO)

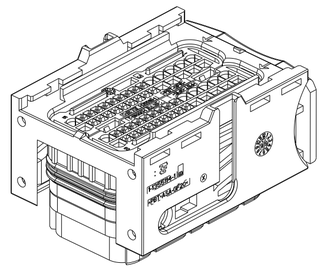

NOTE:

1) CONNECTOR IS SUITABLE TO BE MATED WITH COUNTERPART P/N 284617-1
(IL CONNETTORE SI ACCOPPIA CON LA CONTROPARTE P/N 284617-1)

2) CONNECTOR CAVITIES ARE SUITABLE FOR CONTACTS:
(LE CAVITA' DEL CONNETTORE SONO ADATTE PER CONTATTI:)

- 0.64 MQS Clean Body contact WSR 0.35÷0.50 mm² P/N 1703296-1 (FIAT restricted version)
  (Minimum isolation diameter: 1.2 mm; Maximum isolation diameter: 1.6 mm)
- 0.64 MQS Clean Body contact WSR 0.35 mm² P/N 968220-1
  (Minimum isolation diameter: 1.2 mm; Maximum isolation diameter: 1.3 mm)
- 0.64 MQS Clean Body contact WSR 0.75 mm² P/N 1703298-1 (FIAT restricted version)
  (Minimum isolation diameter: 1.7 mm; Maximum isolation diameter: 1.9 mm)
- 0.64 MQS Clean Body contact WSR 0.50÷0.75 mm² P/N 968221-1
  (Minimum isolation diameter: 1.4 mm; Maximum isolation diameter: 1.9 mm)
- 1.5 mm Clean Boby contact WSR 0.50 mm² P/N 1452158-1
  (Minimum isolation diameter: 1.4 mm; Maximum isolation diameter: 1.6 mm)
- 1.5 mm Clean Boby contact WSR 0.75÷1.50 mm² P/N 1241608-1
  (Minimum isolation diameter: 1.7 mm; Maximum isolation diameter: 2.4 mm)

3) TO CLOSE UNUSED CAVITIES:
(PER CHIUDERE LE CAVITA' NON UTILIZZATE)

- P/N 284583-1 for MQS Clean Body contacts
- P/N 1394872-1 for 1.5 mm Clean Body contact

4) ITEMS 2 AND 3 ARE SUPPLIED NOT ASSEMBLED IN THE SAME PACKAGE.
(I PARTICOLARI 2 E 3 SONO FORNITI NON ASSEMBLATI NELLA STESSA CONFEZIONE.)

5) ITEMS 4 AND 5 ARE SUPPLIED PRE-ASSEMBLED, IN THE SAME PACKAGE.
(I PARTICOLARI 4 E 5 SONO FORNITI PRE-ASSEMBLATI NELLA STESSA CONFEZIONE)

6) ITEMS 4 IS SUPPLIED NOT ASSEMBLED IN THE SAME PACKAGE
ITEM 5 IS NOT SUPPLIED
(L'ITEM 4 E' FORNITO NON ASSEMBLATO NELLA STESSA CONFEZIONE, L'ITEM 5 NON E' FORNITO.)

7) OBSOLETE

CONTACT INSERT SIDE VIEW
(VISTA LATO INSERIMENTO CONTATTI)

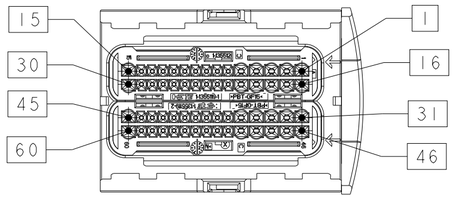

CABLE EXIT
USCITA CAVI

CAVITIES POSITIONS
(POSIZIONE IN CAVITA')

CONTACT P/N (P/N CONTATTO)	POSITION (POSIZIONE)
968220-1 & 968221-1	6 to 14; 21 to 29; 36 to 44; 51 to 59
1452158-1 & 1241608-1	1 to 5; 15 to 20; 30 to 35; 45 to 50; 60

QTY.	QTY.	RAW MATERIALS Materiali	COLOURS Colori	REV	DESCRIPTION Descrizione	ITEM Pos.
-	1	PA6.6 GF30	YELLOW	/	C.P.A. Disp. controllo aggancio leva	5
1	1	PA6.6 GF13	BLACK	/	COVER / Coperchio	4
1	1	PA6.6 GF30	BLACK	/	LEVER / leva	3
1	1	PA6 GF30	VIOLET	/	SECONDARY LOCK 60 POSN. Disp. Ritenz. secondaria, 60 pos.	2
1	1	PBT+ASA-GF20/PA66 GF30 PBT GF15 / PA66 GF25 SILICON	BLACK/LIGHT BROWN:HOUSING YELLOW:PERIPHERAL SEAL RED-BROWN:FAMILY SEAL	/	CARRIER HSG. / Corpo connettore	1
284742-2 (NOTE 6/7)	284742-1 (NOTE 5)	PART-NO. Codice				
F	G	REV				

THIS DRAWING IS A CONTROLLED DOCUMENT.	DWN D.BISETTI 03OCT01	TE Connectivity	
DIMENSIONS: mm	CHK O.CANUTO 03OCT01	NAME CONNECTOR HOUSING, 60 POS. MQS, 1.5mm Clean Body Contacts + COVER AND C.P.A. KIT	
TOLERANCES UNLESS OTHERWISE SPECIFIED: 0 PLC ±0.3; 1 PLC ±0.3; 2 PLC ±0.3; 3 PLC ±-; 4 PLC ±-; ANGLES ±30'	APVD A.GENTA 03OCT01	PRODUCT SPEC 108-20235	
MATERIAL - -	APPLICATION SPEC I.S. 411-20067	WEIGHT -	SIZE A2 / CAGE CODE 00779 / DRAWING NO C-284742 / RESTRICTED TO -
FINISH - -	CUSTOMER DRAWING	SCALE 1:1 / SHEET 1 OF 1 / REV G	