© 2022 TE Connectivity. All Rights Reserved.

REVISIONS					
P	LTR	DESCRIPTION	DATE	DWN	APVD
	C	REVISED PER ECN-22-154128	19MAY2022	DC	JA

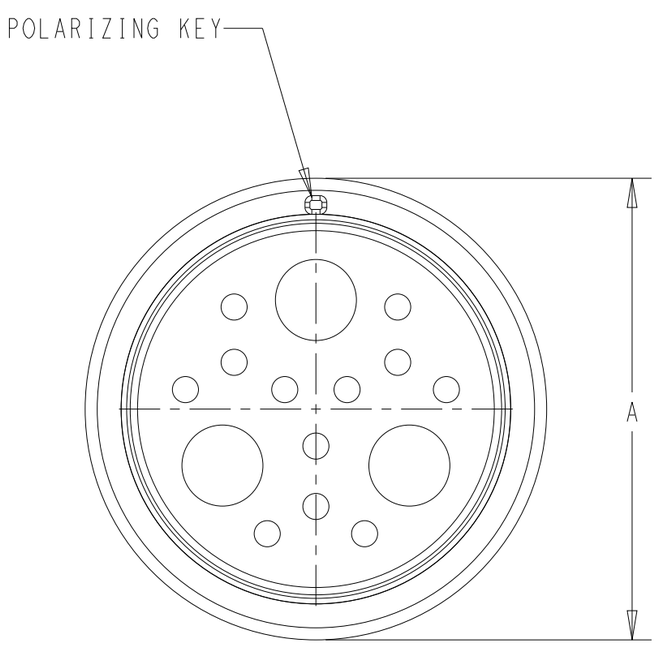

ARR 27-13 SHOWN
FOR REF ONLY

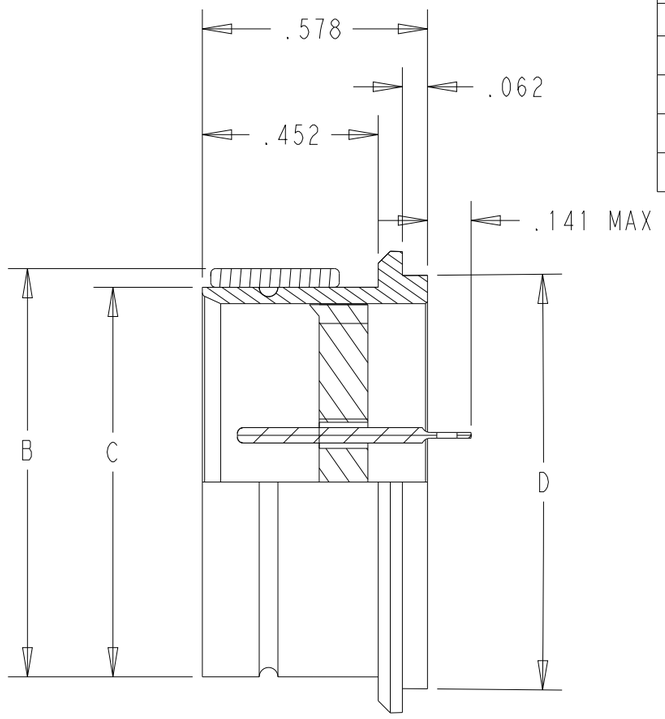

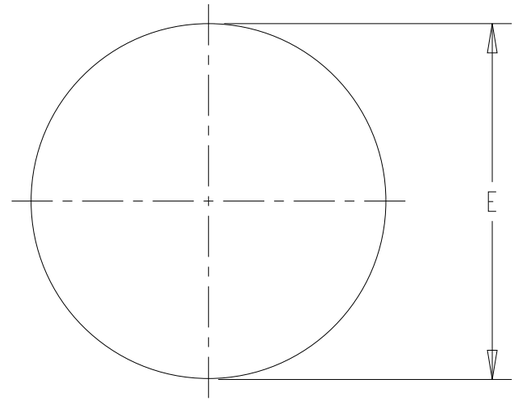

RECOMMENDED
PANEL MTG. HOLE

SHELL SIZE	PART NUMBER	A DIA	B DIA	C DIA	D DIA +.000 -.004	E DIA +.010 -.000	WEIGHT IN LBS
3	DM5600-3-xP	.593	.531	.437	.500	.510	
7	DM5600-7-xP	.750	.687	.578	.625	.635	
12	DM5600-12-xP	.875	.812	.703	.749	.759	
19	DM5600-19-xP	1.000	.937	.843	.875	.885	
27	DM5600-27-xP	1.187	1.125	1.000	1.062	1.072	
37	DM5600-37-xP	1.281	1.218	1.125	1.156	1.166	
61	DM5600-61-xP	1.562	1.500	1.406	1.438	1.448	

1. INSERTS ARE CONTINUOUS DIELECTRIC.
2. CONTACT IDENT. IS IN CONTRASTING COLOR TO INSERT.

△3 FINISH: SHELL / CONTACTS - TIN OVER NICKEL.

NOTE(S):

MC: 75	FINISH: △3

DESCRIPTION:

ENVELOPE
RECEPTACLE CONNECTOR
ELECTRICAL HERMETIC
MINIATURE
QUICK-DISCONNECT
SOLDER MOUNT TYPE

CP	CAGE CODE 11139

FOR BEST WORKMANSHIP PRACTICES, REFERENCE TE SPEC 101-32119

PART SHALL COMPLY WITH TE WORKMANSHIP 101-32106

THIS DRAWING IS A CONTROLLED DOCUMENT.

DIMENSIONS:	TOLERANCES UNLESS OTHERWISE SPECIFIED:
in	0 PLC ±- 1 PLC ±.1 2 PLC ±.02 3 PLC ±.005 4 PLC ±.0005 ANGLES ±-

MATERIAL

FINISH -

DWN DAVID CALVARIO 19MAY2022
CHK JOSE APODACA 19MAY2022
APVD JOSE APODACA 19MAY2022
PRODUCT SPEC -
APPLICATION SPEC -
WEIGHT -

TE Connectivity

NAME
ENVELOPE
RECEPTACLE CONNECTOR
-

SIZE	CAGE CODE	DRAWING NO	RESTRICTED TO
A3	00779	C-DM5600-x-xP	-

DM5600-x-xP	SCALE 1:1	SHEET 1 OF 1	REV C