DRAWING MADE IN THIRD ANGLE PROJECTION

© COPYRIGHT 19 BY AMP INCORPORATED, HARRISBURG, PA.
ALL INTERNATIONAL RIGHTS RESERVED. AMP INCORPORATED PRODUCTS COVERED BY U. S. AND FOREIGN PATENTS AND/OR PATENTS PENDING.

P	F	ZONE	LTR	DESCRIPTION	DATE	APPROVED
	✓		O	WAS 5085-690	3-10-81	
	✓		A	REVISED 7547	9-3-81	
	✓		B	REV. PER ECN-AB-0283	6-29-84	EAM

1. SUGGESTED USAGE KITS-
   A. -1 (2 MALES FOR RECEPTACLE) WITH -4(2 FEMALES FOR PIN HEADER)
   B. -2 (2 FEMALES FOR RECEPTACLE) WITH -5(2 MALES FOR PIN HEADER)
   C. -3 (1 MALE AND 1 FEMALE FOR RECEPTACLE) WITH -6 (1 MALE AND 1 FEMALE FOR PIN HEADER)

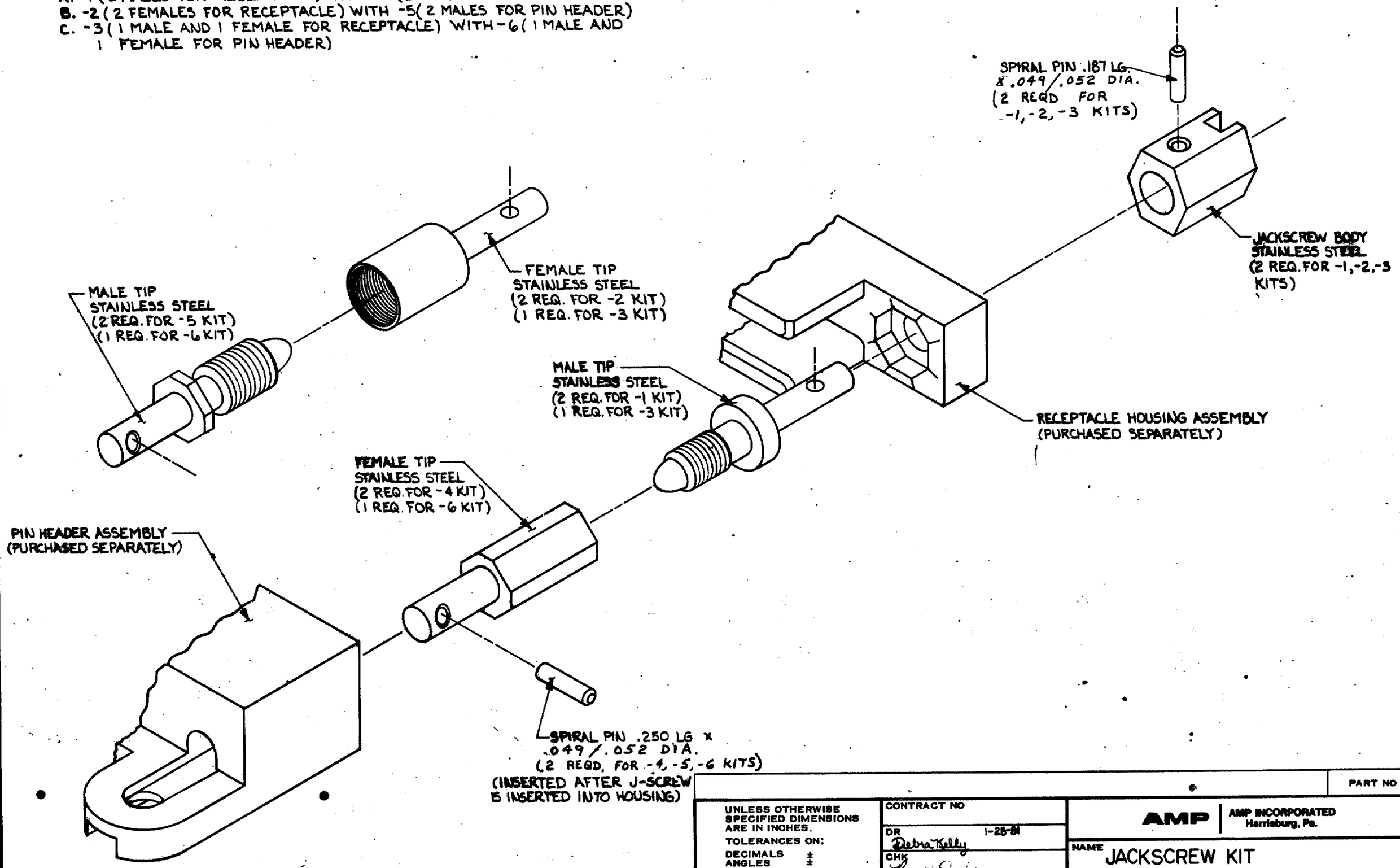

PART NO

UNLESS OTHERWISE SPECIFIED DIMENSIONS ARE IN INCHES.
TOLERANCES ON:
DECIMALS ±
ANGLES ±

MATERIAL

FINISH

CONTRACT NO

DR Debra Kelly 1-28-81

CHK Roger W. Dunbar

APPD Roger W. Dunbar

APPD E. Parsons 3-12-81

DSGN APPD

OTHER APPD

AMP | AMP INCORPORATED Harrisburg, Pa.

NAME JACKSCREW KIT FOR BOX CONNECTOR CABLE USAGE

SIZE	CODE IDENT NO	DRAWING NO
C	00779	531993

SCALE 5x | SHEET 1 OF 1

AMP 1471-6 REV 12-78

CUSTOMER DRAWING