THIS DRAWING IS UNPUBLISHED. RELEASED FOR PUBLICATION 2003
© COPYRIGHT 2003 BY TYCO ELECTRONICS CORPORATION. ALL RIGHTS RESERVED.

LOC	DIST
1	-

REVISIONS

P	LTR	DESCRIPTION	DATE	DWN	APVD
	0	EMISSIONE PRELIMINARE (PRELIMINARY ISSUE)	10MAR2003	M.S.	O.C.
	1	ERA (WAS) P/N 03-51039-1	04NOV2003	M.S.	O.C.
	A	PRIMA EMISSIONE(FIRST ISSUE) ET00-0043-04	11JUN2004	M.P.	O.C.
	A1	RELEASED FOR PRODUCTION (RILASCIATO IN PRODUZIONE) ET00-0239-04	04FEB2005	M.P.	

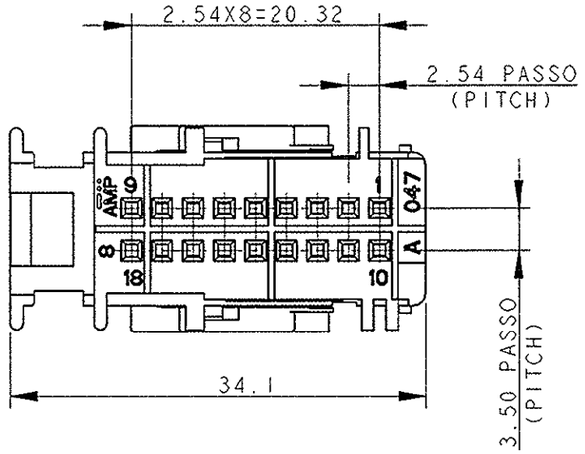

CORAZZA COME FORNITA
(FRAME AS SUPPLIED)

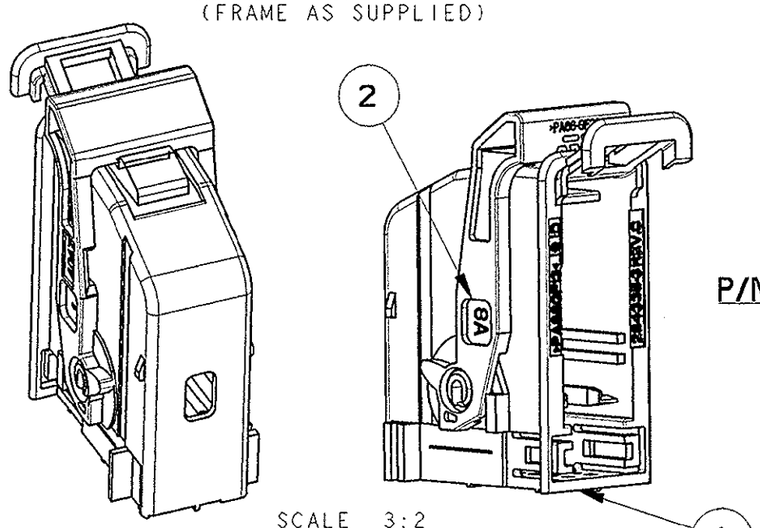

SCALE 3:2

P/N 1745003-1 NERO COME MOSTRATO
(BLACK AS SHOWN))

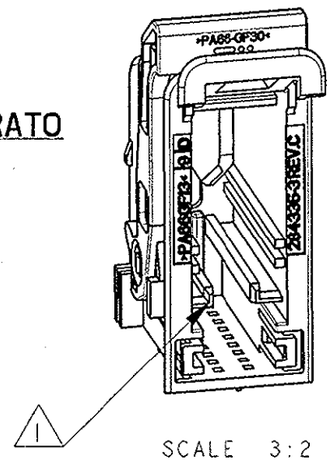

SCALE 3:2

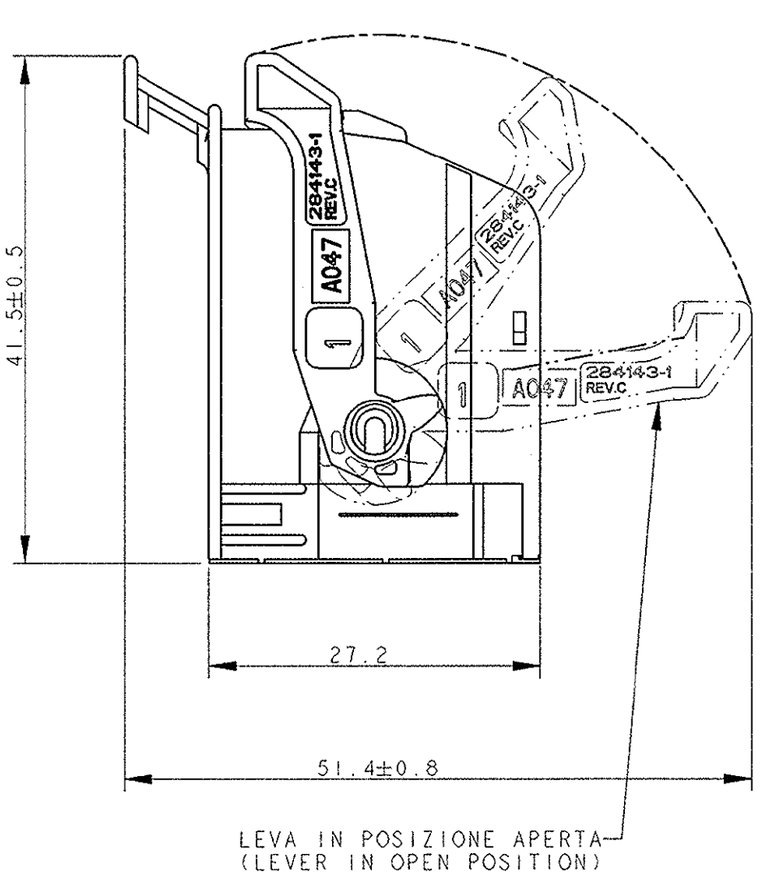

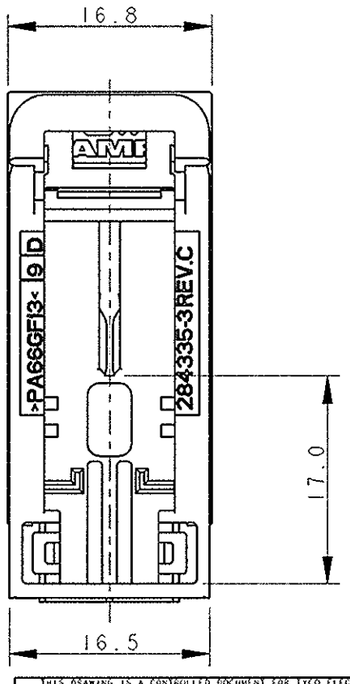

NOTE : (NOTES:)

1. SEDE ADATTA PER MODULO CRIMP P/N 1745005-1 (1745005-2 PER CONN.1745003-2), VEDI TABELLA SU FOGLIO 2/2. (SLOT SUITABLE FOR CRIMP MODULE P/N 1745005-1 (1745005-2 ON CONN.1745003-2), SEE TABLE ON SHEET 2 OF 2).

2. MATERIALE CORAZZA: PA 6.6 CARICATO VETRO, VEDI TABELLA SU FOGLIO 2/3 E 3/3 PER IL COLORE. (SHELL MATERIAL: PA 6.6 GLASS FIBER FILLED, SEE TABLE ON SHEET 2 OF 3 AND 3 OF 3 FOR THE COLOUR).

3. MATERIALE LEVA: PA 6.6 CARICATO VETRO COLORE ROSSO (LEVER MATERIAL: PA 6.6 GLASS FIBER FILLED COLOUR RED).

4) IL PRODOTTO VIENE FORNITO CON LEVA IN POSIZIONE CHIUSA. (THE FRAME IS SUPPLIED WITH LEVER IN CLOSED POSITION).

ITEM	DESCRIPTION (DESCRIZIONE)	MATERIAL/COLOR (MATERIALE/COLORE)	Q.TY (Q.TA')
1	18 POS. FRAME (CORAZZA 18 VIE)	PA66GF/BLACK or GRAY (NERO o GRIGIO)	1
2	LEVER (LEVA)	PA66 G.F./RED (ROSSO)	1

THIS DRAWING IS A CONTROLLED DOCUMENT FOR TYCO ELECTRONICS CORPORATION IT IS SUBJECT TO CHANGE AND THE CONTROLLING ENGINEERING ORGANIZATION SHOULD BE CONTACTED FOR THE LATEST REVISION.

DIMENSIONS: mm

TOLERANCES UNLESS OTHERWISE SPECIFIED:
0 PLC ±0.3
1 PLC ±0.3
2 PLC ±0.3
3 PLC ±-
4 PLC ±-
ANGLES ±1°

MATERIAL 2 3
FINISH 2 3

DWN M. POLIZZI 09APR2004
CHK O.CANUTO 09APR2004
APVD A.GENTA 09APR2004
PRODUCT SPEC 108-20182
APPLICATION SPEC 411-20056
WEIGHT -

tyco Electronics
AMP Italia S.p.A.
C.so F.lli Cervi 15 Collegno (TO)

NAME
FRAME 18 POS.
CRIMP/CRIMP
2.54 mm PITCH

SIZE	CAGE CODE	DRAWING NO	RESTRICTED TO
A3	00779	C-1745003	-

CUSTOMER DRAWING | SCALE 2:1 | SHEET 1 OF 2 | REV A1

THIS DRAWING IS UNPUBLISHED. RELEASED FOR PUBLICATION 2003
© COPYRIGHT 2003 BY TYCO ELECTRONICS CORPORATION. ALL RIGHTS RESERVED.

LOC	DIST
1	-

REVISIONS

P	LTR	DESCRIPTION	DATE	DWN	APVD
	-	SEE SHEET 1	-	-	-

P/N	RAPPRESENTAZIONE GRAFICA (GRAPHICAL REPRESENTATION)	COLORE (COLOUR)	MODULO CRIMP (CRIMP MODULE) P/N	COLORE MODULO (MODULE COLOUR)	CONTROPARTE (COUNTERPART)
1745003-1	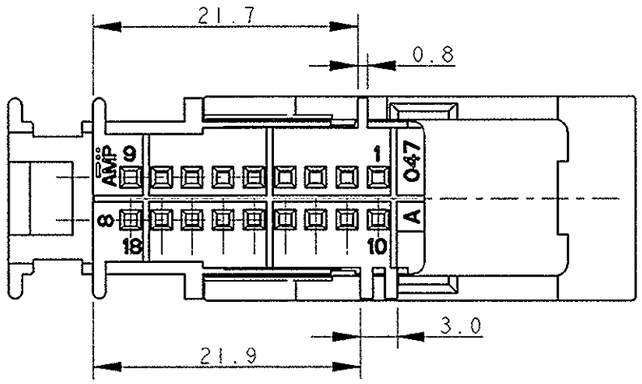	NERO (BLACK)	1745005-1	NERO (BLACK)	DIMA P/N 953466 (HEADER P/N 953466)
1745003-2	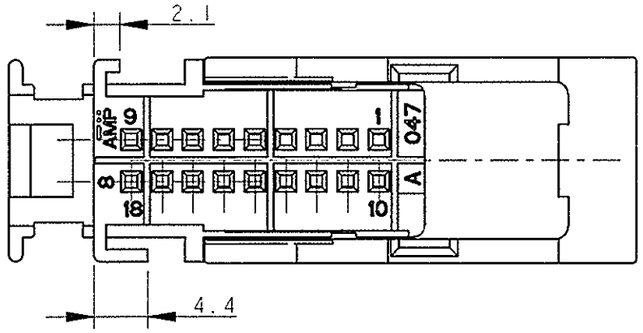	GRIGIO (GREY)	1745005-2	GRIGIO (GREY)	DIMA P/N 953466 (HEADER P/N 953466)

THIS DRAWING IS A CONTROLLED DOCUMENT FOR TYCO ELECTRONICS CORPORATION IT IS SUBJECT TO CHANGE AND THE CONTROLLING ENGINEERING ORGANIZATION SHOULD BE CONTACTED FOR THE LATEST REVISION.

DIMENSIONS: mm

TOLERANCES UNLESS OTHERWISE SPECIFIED:
0 PLC ±0.3
1 PLC ±0.3
2 PLC ±0.3
3 PLC ±-
4 PLC ±-
ANGLES ±1°

MATERIAL -
FINISH -

DWN M. POLITTI 09APR2004
CHK O. CANUTO 09APR2004
APVD A. GENTA 09APR2004
PRODUCT SPEC -
APPLICATION SPEC -
WEIGHT -

tyco Electronics
AMP Italia S.p.A.
C.so F.lli Cervi 15 Collegno (TO)

NAME
FRAME 18 POS.
CRIMP/CRIMP
2.54 mm PITCH

SIZE	CAGE CODE	DRAWING NO	RESTRICTED TO
A3	00779	C-1745003	-

CUSTOMER DRAWING | SCALE 2:1 | SHEET 2 OF 2 | REV A1