DESCRIPTION	MATERIAL	FINISH
BODY	BRASS	GOLD
PIN	BeCu	GOLD
INSULATION	PTFE	N/A

REVISIONS			
REV	DESCRIPTION	DATE	APPV
A	INITIAL RELEASE OF LINX INTERNAL DRAWING	31-AUG-12	SAH
B	ADDED NOTE 13; DIMPLING REQUIREMENT: ADDED DIMPLES TO PART	3-JUN-13	SAH
C	UPDATED OUTER BARREL DIMENSION WAS Ø0.200 IS Ø0.212; UPDATED NOTE 3	29-NOV-17	CLL

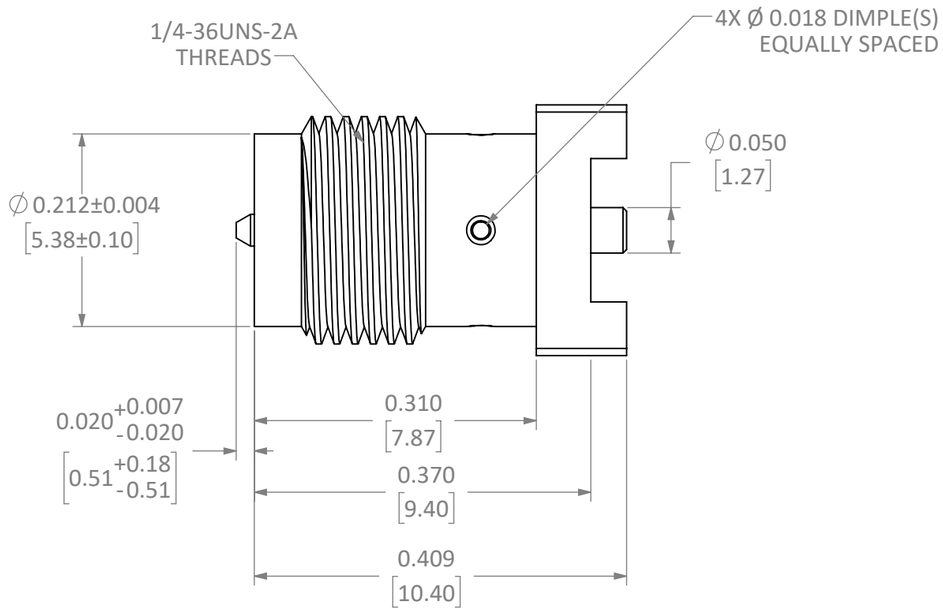

SIDE VIEW

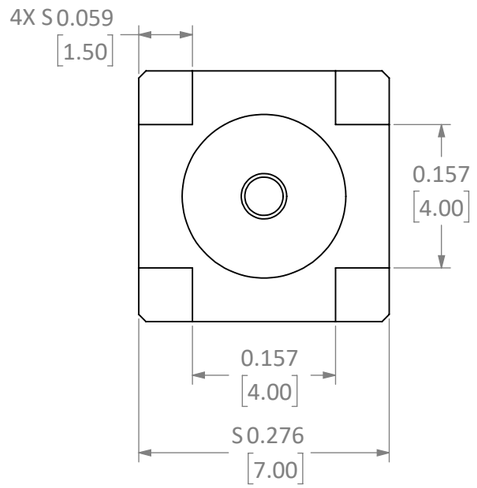

BOTTOM VIEW

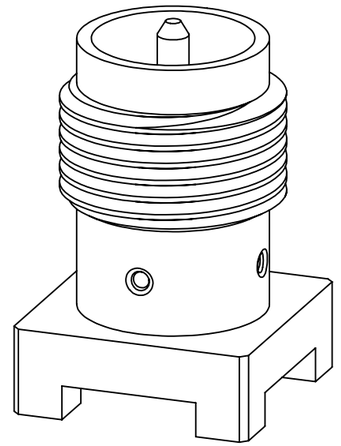

NOTES: (UNLESS OTHERWISE SPECIFIED)
1. ALL DIMENSIONS ARE IN INCHES [mm].
2. DIMENSIONS APPLY AFTER FINISHING.
3. MANUFACTURE TO BE COMPLIANT WITH EU RoHS DIRECTIVE, USE MATERIALS THAT DO NOT CONTAIN REACH SUBSTANCES OF VERY HIGH CONCERN >1000ppm, AND USE DRC CONFLICT-FREE SOURCED MATERIALS.
4. SAFETY BREAK ALL SHARP CORNERS AND EDGES .02 MAXIMUM.
5. LOT SAMPLE ELECTRICAL TEST REQUIRED PER *LDC-OTP-SPC-SMAT.*
6. ELECTRICAL INTERFACE PER *SPC-CON-IFC-RPS.*
7. INSERTION LOSS (S21): [0.04√f[GHz]]
   0.026 @ 425MHz
   0.038 @ 900MHz
   0.063 @ 2.45GHz.
8. MINIMUM FREQUENCY RANGE: 0 - 6GHz.
9. IMPEDANCE: 50Ω.
10. VOLTAGE RATING: 335 VRMS MIN AT SEA LEVEL.
11. DIELECTRIC WITHSTANDING VOLTAGE: 1000 VMRS MIN AT SEA LEVEL.
12. CONTACT RESISTANCE: CENTER CONTACT: 2.0 mΩ
    BODY: 2.0 mΩ.
13. CONNECTOR TO BE DIMPLED ON FOUR SIDES 90° APART, DEEP ENOUGH TO SUFFICIENTLY RETAIN PTFE INSULATION.

WARNING: THIS DRAWING CONTAINS PROPRIETARY INFORMATION THAT IS THE SOLE PROPERTY OF LINX TECHNOLOGIES, AND SHALL BE TREATED AS SUCH. NO DISCLOSURE OR REPRODUCTION OF THIS DOCUMENT IS PERMITTED, IN WHOLE OR IN PART, WITHOUT THE EXPRESS WRITTEN PERMISSION OF LINX TECHNOLOGIES OR ITS DESIGNATED AGENTS.

159 ORT LANE
MERLIN, OR 97532

MATERIAL:
WEIGHT:
FINISH:

INTERPRET DIMENSIONS AND TOLERANCES PER ASME Y14.5.
.X ±.2
.XX ±.10
.XXX ±.050
ANGLES: ±1°
SURFACE: 32

PROJECTION:

DRAWN: B.MURPHY DT: 11-MAR-13
ENGR: S.HOGAN DT: 3-JUN-13

TITLE:
SPECIFICATION DRAWING
RP-SMA FEM PCB SURFACE MT

SIZE	DWG. NO.	REV
B	C-CONREVSMA001-SMD-G	A

SCALE: 6:1 | DO NOT SCALE DRAWING | SHEET 1 OF 1

LDCFDFB_B