DRAWING MADE IN THIRD ANGLE PROJECTION

© COPYRIGHT 1976 BY AMP INCORPORATED, HARRISBURG, PA. ALL INTERNATIONAL RIGHTS RESERVED. AMP INCORPORATED PRODUCTS COVERED BY U. S. AND FOREIGN PATENTS AND/OR PATENTS PENDING.

LOC	DIST
AD	00

REVISIONS

P	F	ZONE	LTR	DESCRIPTION	DATE	APPROVED
			0	RELEASED DWG 5-12-69		
			A	OBSOLETE AD3686	8/89	CP 90"
			B	REV PER 0010-1143-95	11/95	P.B.
			C	REV PER EC 0G3C-233-01	02OCT01	MM

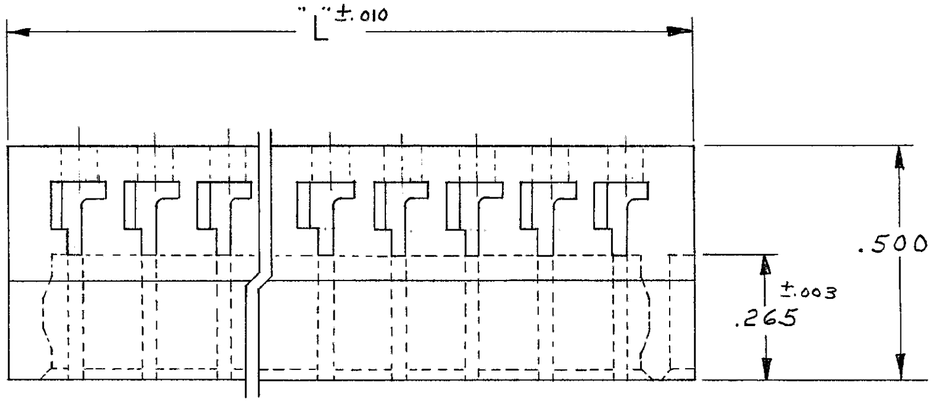

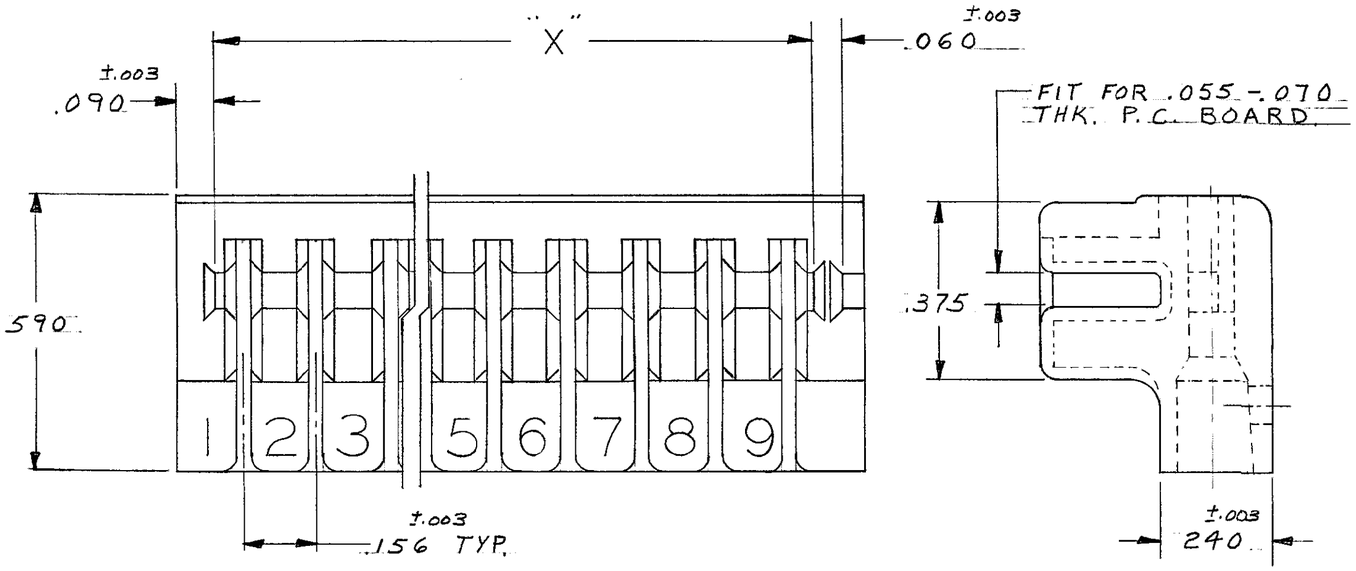

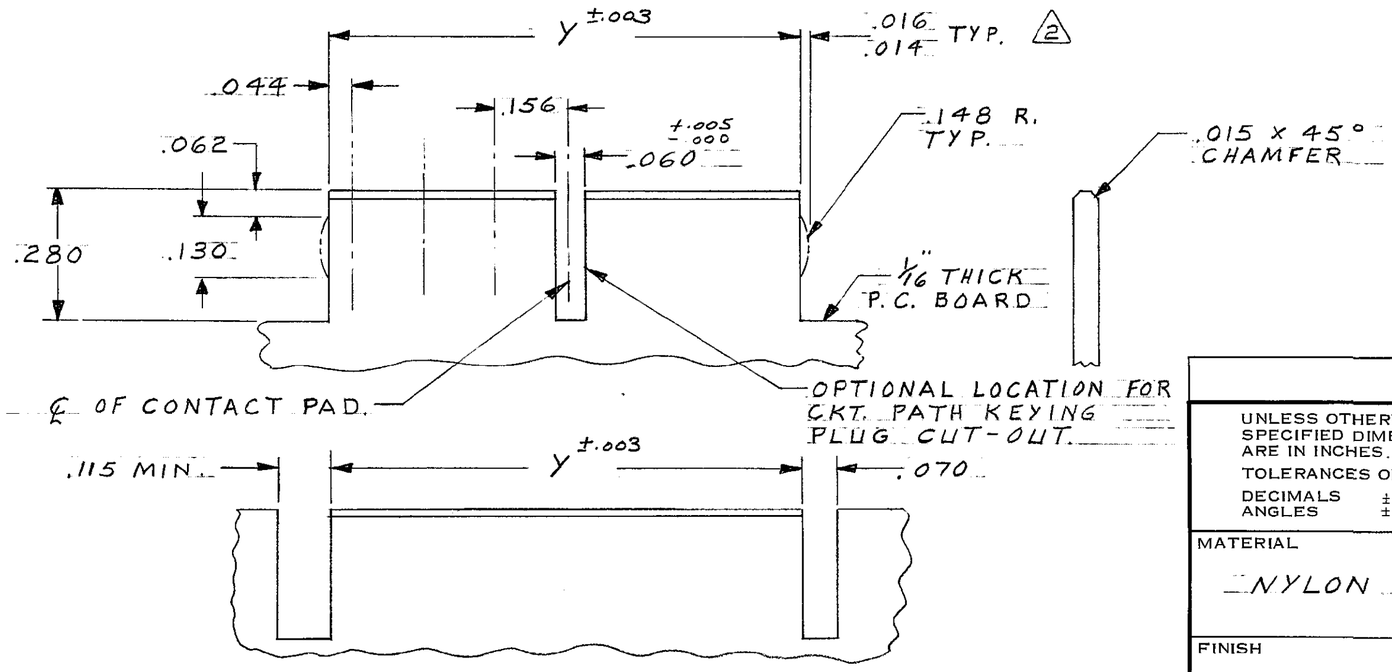

OPTIONAL CUT-OUTS.

1. REFER TO 60215, 583284 & 530501 FOR TERMINALS.
2. THE RETAINING DIMPLES ARE OPTIONAL IN BOTH CUT-OUTS.
3. CONTACT CAVITIES ENLARGED FOR 18-16AWG LEADS WITH MAXIMUM INSULATION DIA. OF .130.

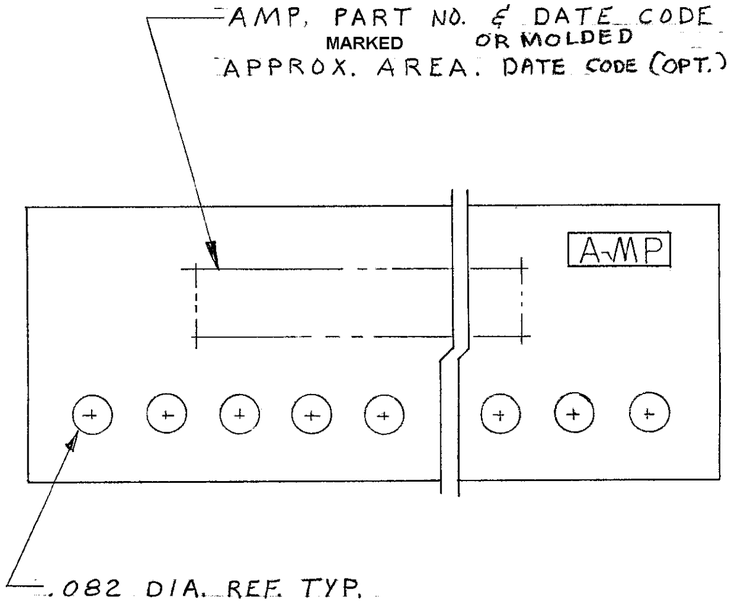

CUST. 530555

B

OBSOLETE	Y	L	X	POS.	PART NO
	~~1.805~~	~~2.028~~	~~1.818~~	~~12~~	~~530555-3~~
	~~1.337~~	~~1.560~~	~~1.350~~	~~9~~	~~530555-2~~
	.400	.624	.414	3	530555-1

UNLESS OTHERWISE SPECIFIED DIMENSIONS ARE IN INCHES.
TOLERANCES ON:
DECIMALS ± .005
ANGLES ±

MATERIAL: NYLON

FINISH: #

CONTRACT NO

DR M. Smith 3-5-76
CHK Runkle 3-5-76
APPD D.M. Buskey 3-5-76
APPD R.G. Trump 3/11/76
DSGN APPD
OTHER APPD

AMP INCORPORATED Harrisburg, Pa.

NAME: HOUSING, DUO-TYNE FLAG WITH TEST PROBE ACCESS

SIZE	CODE IDENT NO	DRAWING NO
C	00779	530555

SCALE 4-1 SHEET 1 OF 1

AMP 1471-6 (7-73)

CUSTOMER DRAWING