© – TE Connectivity. All Rights Reserved.

REVISIONS					
P	LTR	DESCRIPTION	DATE	DWN	APVD
	K	REVISED PER ECO-20-001327	05JUN2020	SB	JO

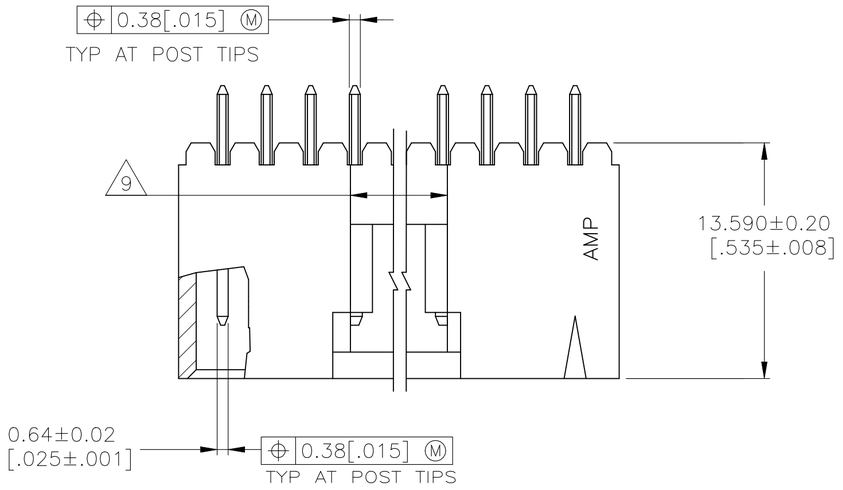

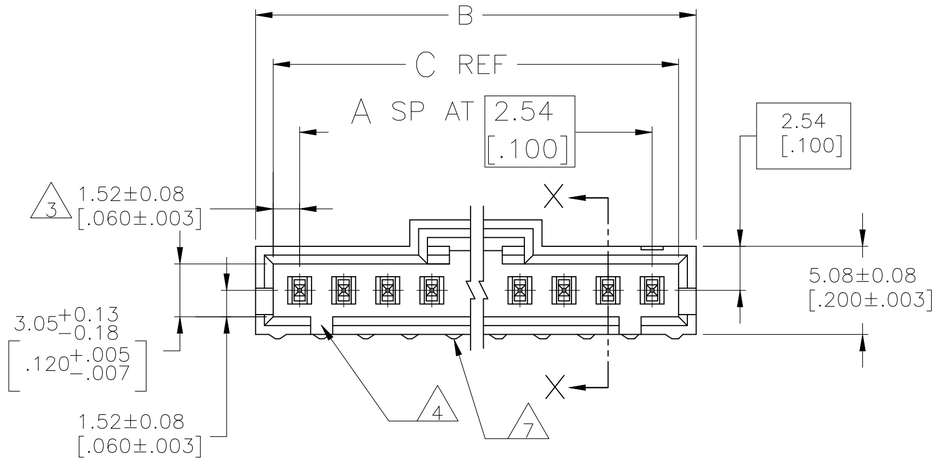

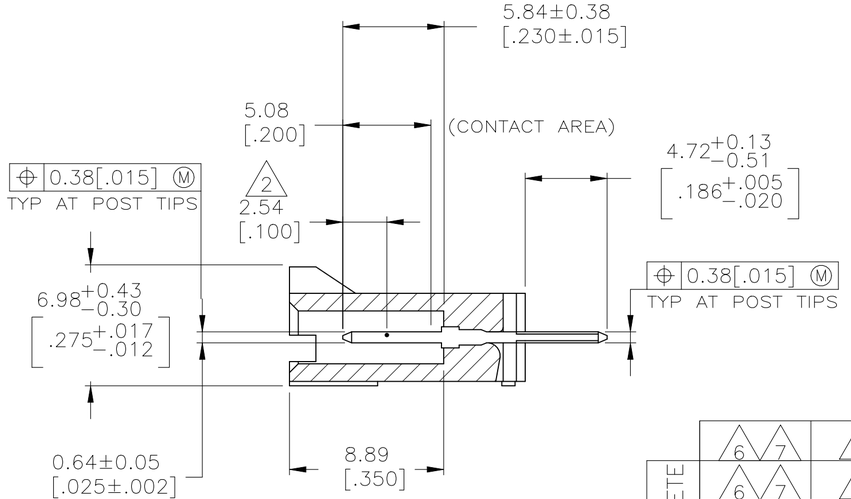

SECTION X–X

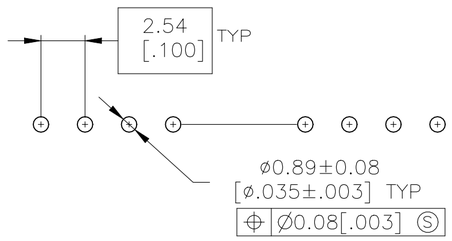

RECOMMENDED HOLE LAYOUT

1. .00254[.000100] BRIGHT TIN–LEAD OVER .00127[.000050] NICKEL.
2. POINT OF MEASUREMENT FOR PLATING THICKNESS.
3. THE NOTED DIMENSIONS APPLY AT THE INTERSECTION OF THE POST AND THE HOUSING.
4. ON ASSEMBLIES WITH FOUR OR MORE POSITIONS, TWO POLARIZATION SLOTS.
   ON ASSEMBLIES WITH TWO OR THREE POSITIONS, ONE POLARIZATION SLOT.
5. .00254[.000100] MATTE TIN OVER .00127[.000050] NICKEL.
6. HIGH TEMPERATURE CONFIGURATION.
7. STANDOFF NOT PRESENT ON UNDERSIDE OF ASSEMBLY
8. OBSOLETE PARTS: OBSOLETE CIS STREAMLINING PER D.RENAUD/D.SINISI
9. 0.25 [.010] RECESS PERMISSIBLE IN THIS AREA FOR MOLD SHUT OFF

	REMARKS	PLATING	C	B	A	NO. OF POSN	PART NO.
OBSOLETE	6 7	5	15.75 [.620]	17.65 [.695]	5	6	5-104904-4
OBSOLETE	6 7	5	10.67 [.420]	12.57 [.495]	3	4	~~5-104904-3~~
OBSOLETE	6 7	5	8.13 [.320]	10.03 [.395]	2	3	~~5-104904-2~~
OBSOLETE	6 7	5	5.59 [.220]	7.49 [.295]	1	2	~~5-104904-1~~
	6	1	15.75 [.620]	17.65 [.695]	5	6	104904-4
OBSOLETE 8	6	1	10.67 [.420]	12.57 [.495]	3	4	~~104904-3~~
OBSOLETE 8	6	1	8.13 [.320]	10.03 [.395]	2	3	~~104904-2~~
OBSOLETE 8	6	1	5.59 [.220]	7.49 [.295]	1	2	~~104904-1~~

THIS DRAWING IS A CONTROLLED DOCUMENT.

DIMENSIONS: mm [INCHES]

TOLERANCES UNLESS OTHERWISE SPECIFIED:
0 PLC ± –
1 PLC ± –
2 PLC ± 0.13[.005]
3 PLC ± –
4 PLC ± –
ANGLES ± –

MATERIAL
HOUSING:FLAME RETARDANT LCP COLOR – BLACK
CONTACTS: BRASS

FINISH
SEE TABLE

DWN J.HERRINGTON 12-10-93
CHK J.GESFORD 12-10-93
APVD J.GESFORD 12-10-93
PRODUCT SPEC 108-25034
APPLICATION SPEC 114-25026
WEIGHT –

TE Connectivity

NAME
HDR ASSY,VERT,SINGLE ROW
2.54[.100]CL,0.64[.025]SQPOST.
WITH PLZN&LATCHING, AMPMODU MTE

SIZE	CAGE CODE	DRAWING NO	RESTRICTED TO
A2	00779	C-104904	–

CUSTOMER DRAWING

SCALE	SHEET	REV
4:1	1 OF 1	K

104904