THIS DRAWING IS UNPUBLISHED. RELEASED FOR PUBLICATION – ,2017.
© COPYRIGHT 2017 by –TE Connectivity Germany Gmbh ALL RIGHTS RESERVED.

REVISIONS					
P	LTR	DESCRIPTION	DATE	DWN	APVD
	A2	CHANGE OF SHELL DESIGN	22NOV2024	KS	LET

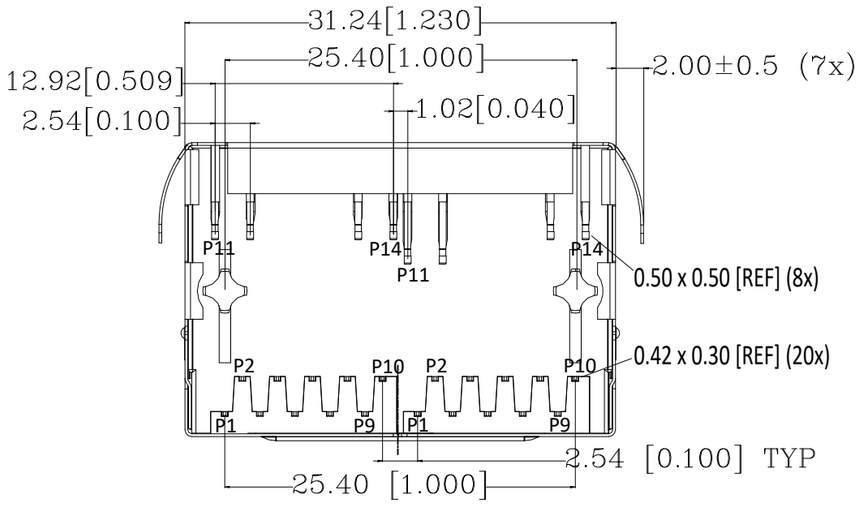

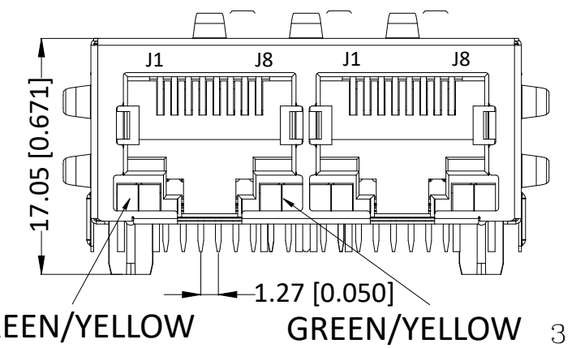

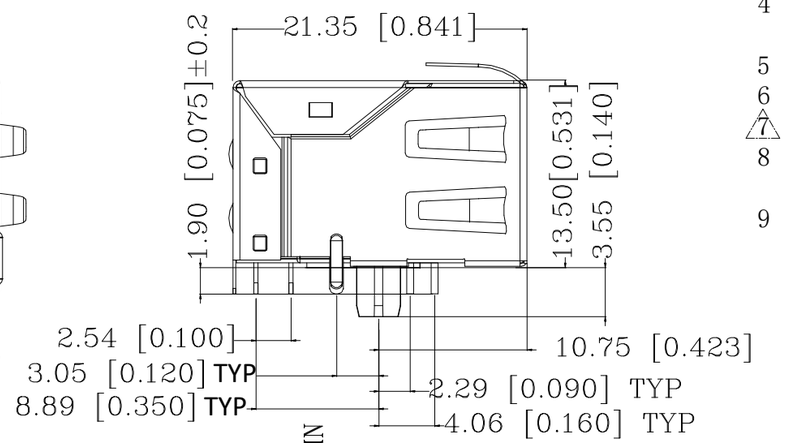

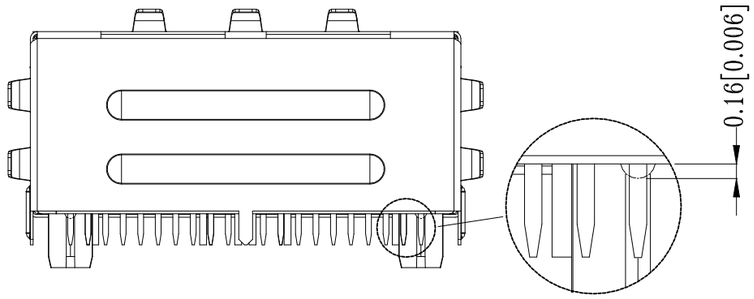

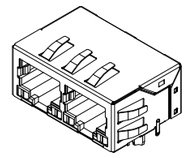
1:1

1. CONNECTOR MATERIAL:
   HOUSING: LCP BLACK UL94 V-0
   INSERT: LCP BLACK UL94 V-0
   SHIELD: BRASS
   SHIELD PLATING: NICKEL
   CONTACT: COPPER ALLOY
   CONTACT PLATING: SELECTIVE GOLD, MIN. 0.76 µm (30 µ inch) IN CONTACT AREA OVER MIN. 1.27 µm (50 µ inch) NICKEL
   SOLDER PIN PLATING: 3.05 µm (120 µ inch) TIN OVER 1.27 µm (50 µ inch) NICKEL OVER ALL
   SHIELDING PIN PLATING: NICKEL
2. PIN NOT ELECTRICALLY CONNECTED MAYBE OMITTED SEE ELECTRICAL CIRCUIT DIAGRAM FOR OMITTED PINS
3. RJ45 CAVITIY DIMENSION CONFORM TO FCC PART 68
4. THE PART IS RECOMMENDED FOR REFLOW SOLDERING PROCESS PEAK SOLDERING: TEMPERATURE MAX. +260° C, MAX. 10s
5. OPERATING TEMPERATURE: T= -40° C TO +85° C
6. STORAGE TEMPERATURE: T= -40° C TO +85° C
7. UNLESS OTHERWISE SPECIFIED, SEE TABLE FOR ALL DIMENSIONS TOLERANCES
8. JACK CONFIGURATION: 1 x 2
   TAB DIRECTION: DOWN
9. PACKAGING: TRAY ACCORDING TO PACKAGING SPECIFICATION 107-18116

7 TABLE OF TOLERANCE (mm)

RANGE	TOLERANCE
0–10	±0.15
>10–40	±0.25
>40–70	±0.30
>70	±0.40

THIS DRAWING IS A CONTROLLED DOCUMENT.

DIMENSIONS: mm [INCHES]

TOLERANCES UNLESS OTHERWISE SPECIFIED: (7)
0 PLC ± –
1 PLC ± –
2 PLC ± –
3 PLC ± –
4 PLC ± –
ANGLES ± –

MATERIAL 1 FINISH 1

DWN	GANESH C M	27AUG2016
CHK	FRANZ MUELLER	27AUG2016
APVD	MARTIN SZELAG	27AUG2016
PRODUCT SPEC	108-94552	
APPLICATION SPEC	114-94447	
WEIGHT	–	

TE Connectivity

NAME: RJ45 JACK INT.MAG. 1Gb LED 1x2 – –

SIZE	CAGE CODE	DRAWING NO	RESTRICTED TO
A3	00779	C-5-2301996-8	–

CUSTOMER DRAWING | SCALE 3:1 | SHEET 1 OF 3 | REV A2

THIS DRAWING IS UNPUBLISHED. RELEASED FOR PUBLICATION – ,2017.
© COPYRIGHT 2017 by –TE Connectivity Germany Gmbh ALL RIGHTS RESERVED.

REVISIONS

P	LTR	DESCRIPTION	DATE	DWN	APVD
	–	SEE SHEET 1	–	—	—

SUGGESTED PCB LAYOUT

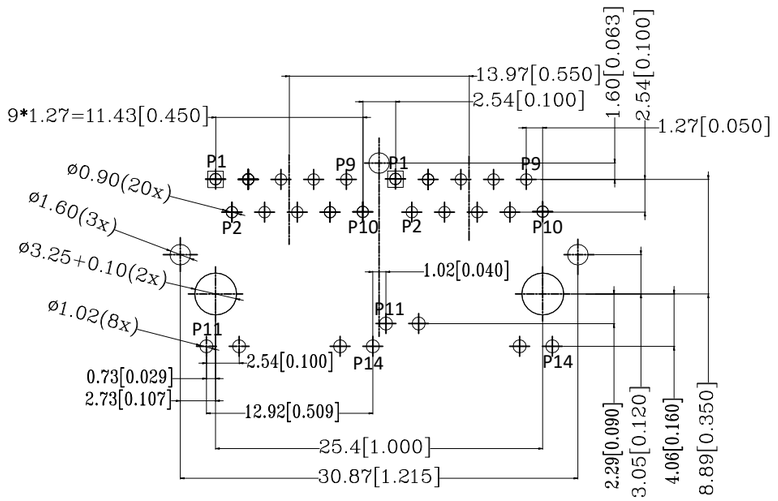

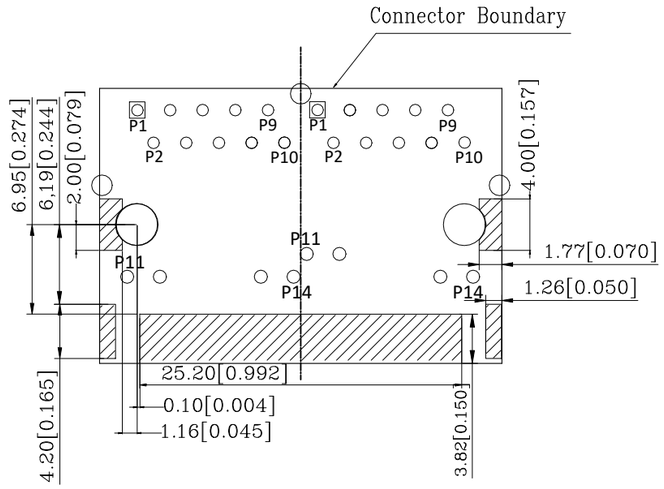

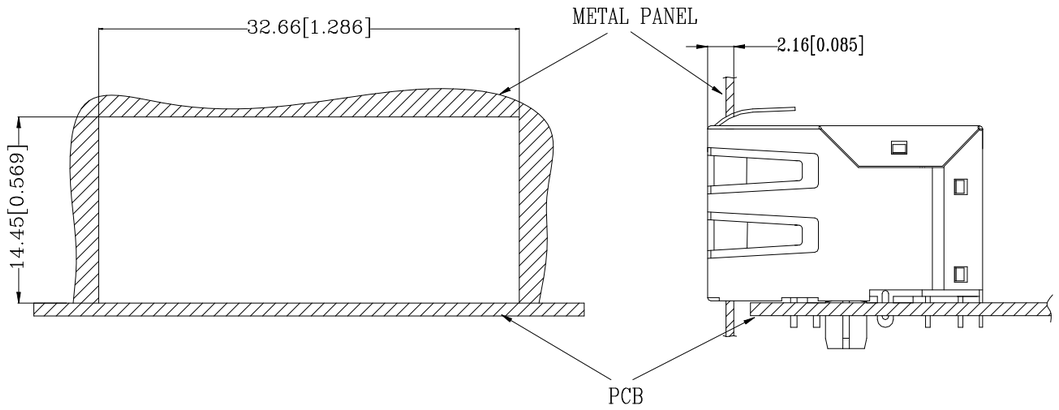

UNIT: mm / inch
TOLERANCES: ±0.10 / 0.004
ONLY FOR THIS VIEW

THIS DRAWING IS A CONTROLLED DOCUMENT.

DIMENSIONS: mm [INCHES]

TOLERANCES UNLESS OTHERWISE SPECIFIED:
0 PLC ± –
1 PLC ± –
2 PLC ± –
3 PLC ± –
4 PLC ± –
ANGLES ± –
7

MATERIAL 1

FINISH 1

DWN	GANESH C M	27AUG2016
CHK	FRANZ MUELLER	27AUG2016
APVD	MARTIN SZELAG	27AUG2016
PRODUCT SPEC	108-94552	
APPLICATION SPEC	114-94447	
WEIGHT	0	

TE Connectivity

NAME: RJ45 JACK INT.MAG. 1Gb LED 1x2

SIZE	CAGE CODE	DRAWING NO	RESTRICTED TO
A3	00779	C-5-2301996-8	—

CUSTOMER DRAWING | SCALE 3:1 | SHEET 2 OF 3 | REV A2

THIS DRAWING IS UNPUBLISHED. RELEASED FOR PUBLICATION – ,2017.
© COPYRIGHT 2017 by –TE Connectivity Germany Gmbh ALL RIGHTS RESERVED.

REVISIONS

P	LTR	DESCRIPTION	DATE	DWN	APVD
	–	SEE SHEET 1	–	—	—

ELECTRICAL CIRCUIT DIAGRAM

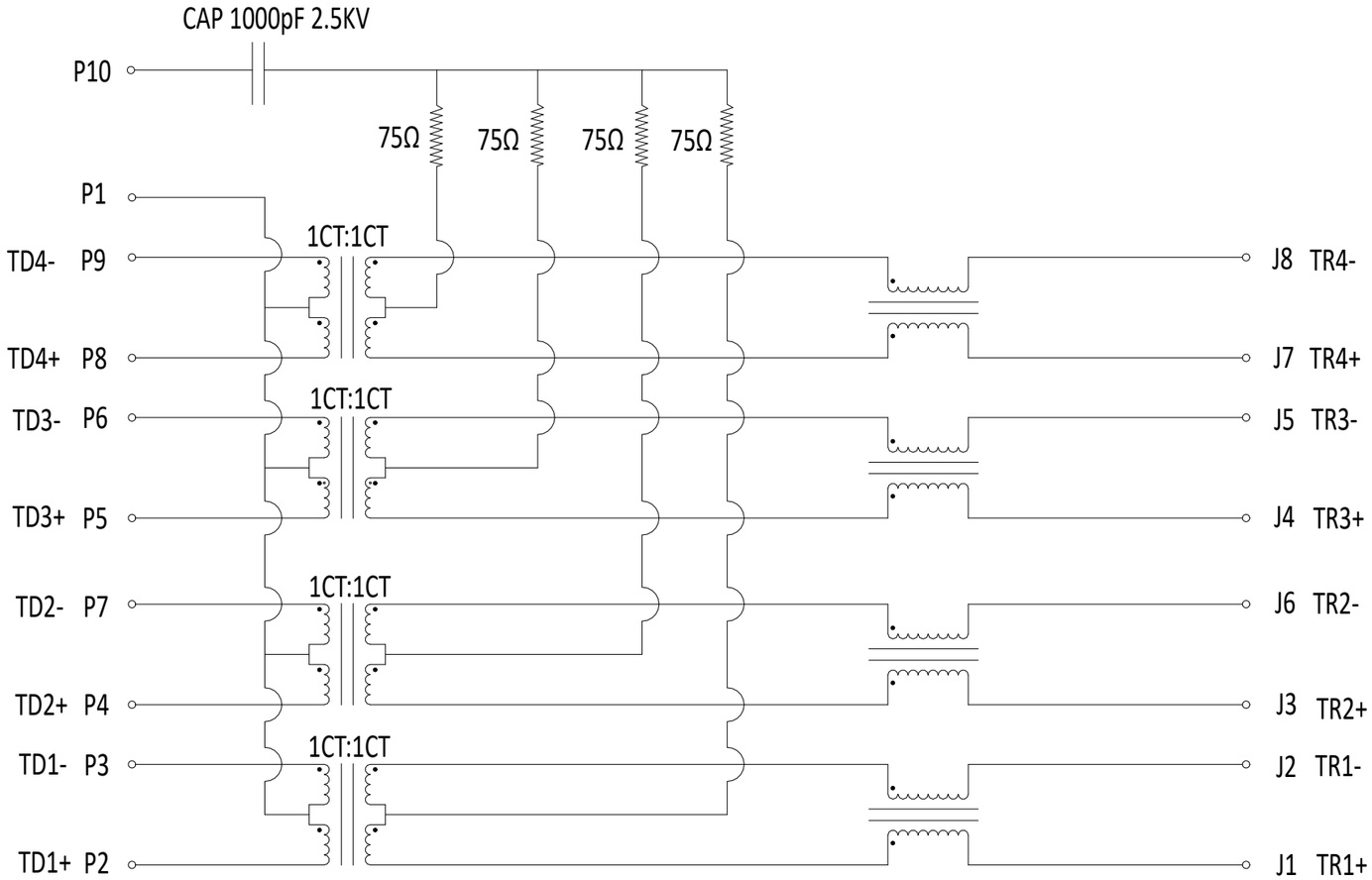

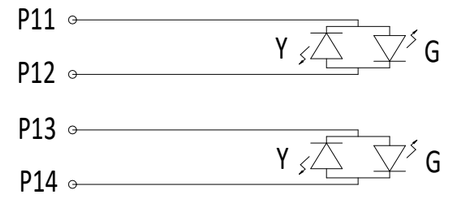

Pin	Green	Yellow	Pin	Green	Yellow
P11	+	–	P13	+	–
P12	–	+	P14	–	+

WIRE BONDED , V_F = 1.8V ~ 2.4V, I_F = 20mA

1. TURN RATIO @100kHz: (P2~P3):(J1~J2) = 1:1±2%
   (P4~P7):(J3~J6) = 1:1±2%
   (P5~P6):(J4~J5) = 1:1±2%
   (P8~P9):(J7~J8) = 1:1±2%
2. PRIMARY INDUCTANCE: 350µH MIN. @100kHZ,0.1V 8mA DC BIAS
3. DC RESISTANCE: 1.2 OHMS MAX.
4. INSERTION LOSS: 1–100MHz –1.0dB MAX.
   100–125MHz –1.2dB MAX.
5. RETURN LOSS: 1–40MHz –16dB MIN. (@40MHz –17.0dB TYP)
   40–100MHz –10dB+20log(f/80MHz) MIN.
   (@100MHz –9.0dB TYP)
6. CROSS TALK: 1–100MHz –30dB MIN.
7. COMMON TO COMMON MODE ATTENUATION: 1–100MHz –30dB MIN.
8. ISOLATION: PHY SIDE TO LINE SIDE: 2250VDC

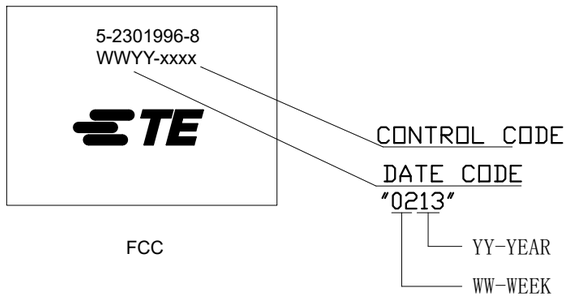

THIS DRAWING IS A CONTROLLED DOCUMENT.

DIMENSIONS: mm [INCHES]

TOLERANCES UNLESS OTHERWISE SPECIFIED:
0 PLC ±–
1 PLC ±–
2 PLC ±–
3 PLC ±–
4 PLC ±–
ANGLES ±–
7

MATERIAL 1

FINISH 1

DWN	GANESH C M	27AUG2016
CHK	FRANZ MUELLER	27AUG2016
APVD	MARTIN SZELAG	27AUG2016
PRODUCT SPEC	108–94552	
APPLICATION SPEC	114–94447	
WEIGHT	0	

TE Connectivity

NAME: RJ45 JACK INT.MAG. 1Gb LED 1x2

SIZE	CAGE CODE	DRAWING NO	RESTRICTED TO
A3	00779	C-5-2301996-8	—

CUSTOMER DRAWING | SCALE 3:1 | SHEET 3 OF 3 | REV A2