REVISION					
ZONE	LTR	ECN	DESCRIPTION	DATE	APPROVED
	B	39366	UPDATE REVISION LETTER.	9/14/99	PG

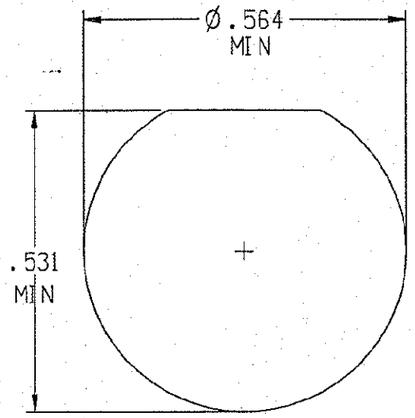

D HOLE DIM

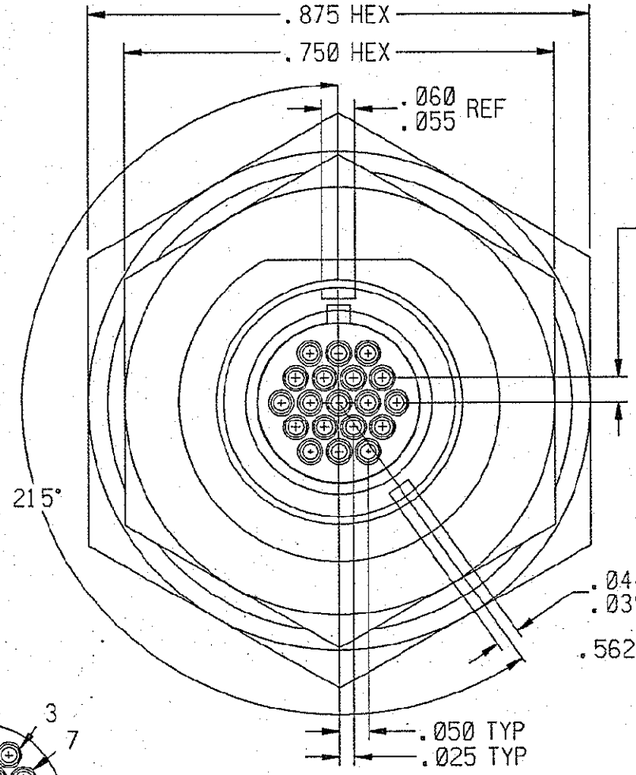

PANEL NOT SHOWN ON THIS VIEW

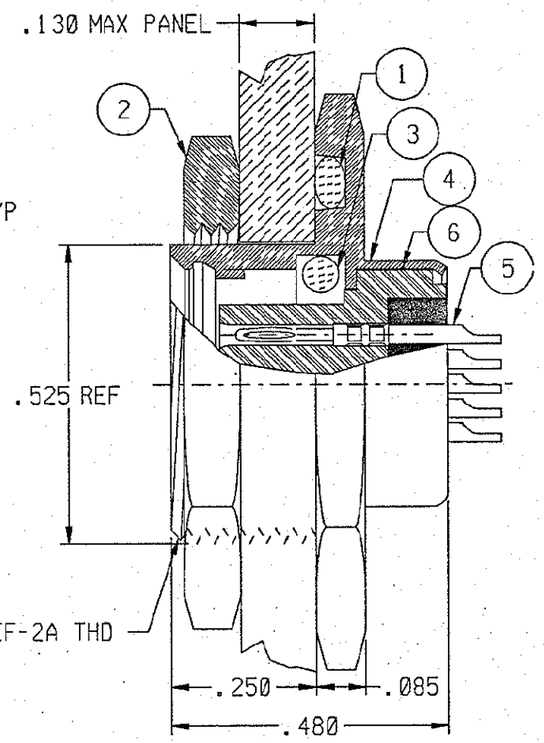

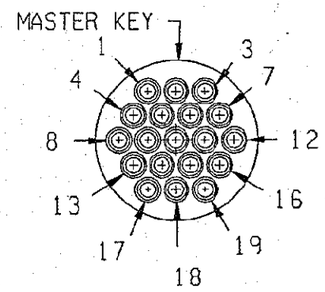

CONTACT ARRANGEMENTS

MATING FACE VIEW

NOTES: UNLESS OTHERWISE SPECIFIED

QTY	PART NUMBER	DESCRIPTION	MATERIAL & FINISH	ITEM NO.
1	083-9144-0013	ISULATOR, EQR, 19 POS.	RYTON	6
19	096-0524-0101	SOLDER POT ASSY.	COPPER ALLOY, GOLD PLATED	5
1	083-9148-0026	RCPT, SHELL, EQR 19 POS	BRASS/ASTM B 16, NKL PLATED	4
1	083-9145-0003	'O' RING RCPT	SILICONE RUBBER	3
1	083-4155-0010	MOUNTING NUT	BRASS/ASTM B 16, NKL PLATED	2
1	083-4145-0009	'O' RING MOUNTING	SILICONE RUBBER	1

PARTS LISTS

UNLESS OTHERWISE SPECIFIED DIMENSIONS ARE IN INCHES. TOLERANCE ARE:

FRACTIONS ± 1/8 | DECIMALS .XX ±.01, .XXX ±.005 | ANGLES ±2°

MATERIAL:

FINISH:

APPROVALS	SIGNATURE	DATE
DRAWN	HENNY G.	1-26-99
CHECKED		
PRD. ENG.		9/14/99
APPROVED		

THIS DOCUMENT IS THE PROPERTY OF MICRODOT CONNECTORS, A DIVISION OF UNI-STAR INDUSTRIES INC. USE OF THIS DOCUMENT OR ANY PART THEREOF IS STRICTLY FORBIDDEN WITHOUT THE EXPRESS WRITTEN PERMISSION OF MICRODOT CONNECTORS, A DIVISION OF UNI-STAR INDUSTRIES INC.

MICRODOT CONNECTORS
A DIVISION OF UNI-STAR INDUSTRIES INC.
306 PASADENA AVE., SO. PASADENA, CA 91030

RCPT, REAR MOUNT, EQR, 19 POSITION
SOLDER POT TERMINATION

PROD CODE 500

CODE COM

SIZE	CODE IDENT NO.	DRAWING NO.
B	98278	629-9019-0002

SCALE: NONE SHEET 1 OF 1

Property of Tyco Electronics Corporation October, 2001
CUSTOMER DRWG: 9-1532001-5 REV: B PG 1 OF 1