-1; AS SHOWN
-1; ⊠

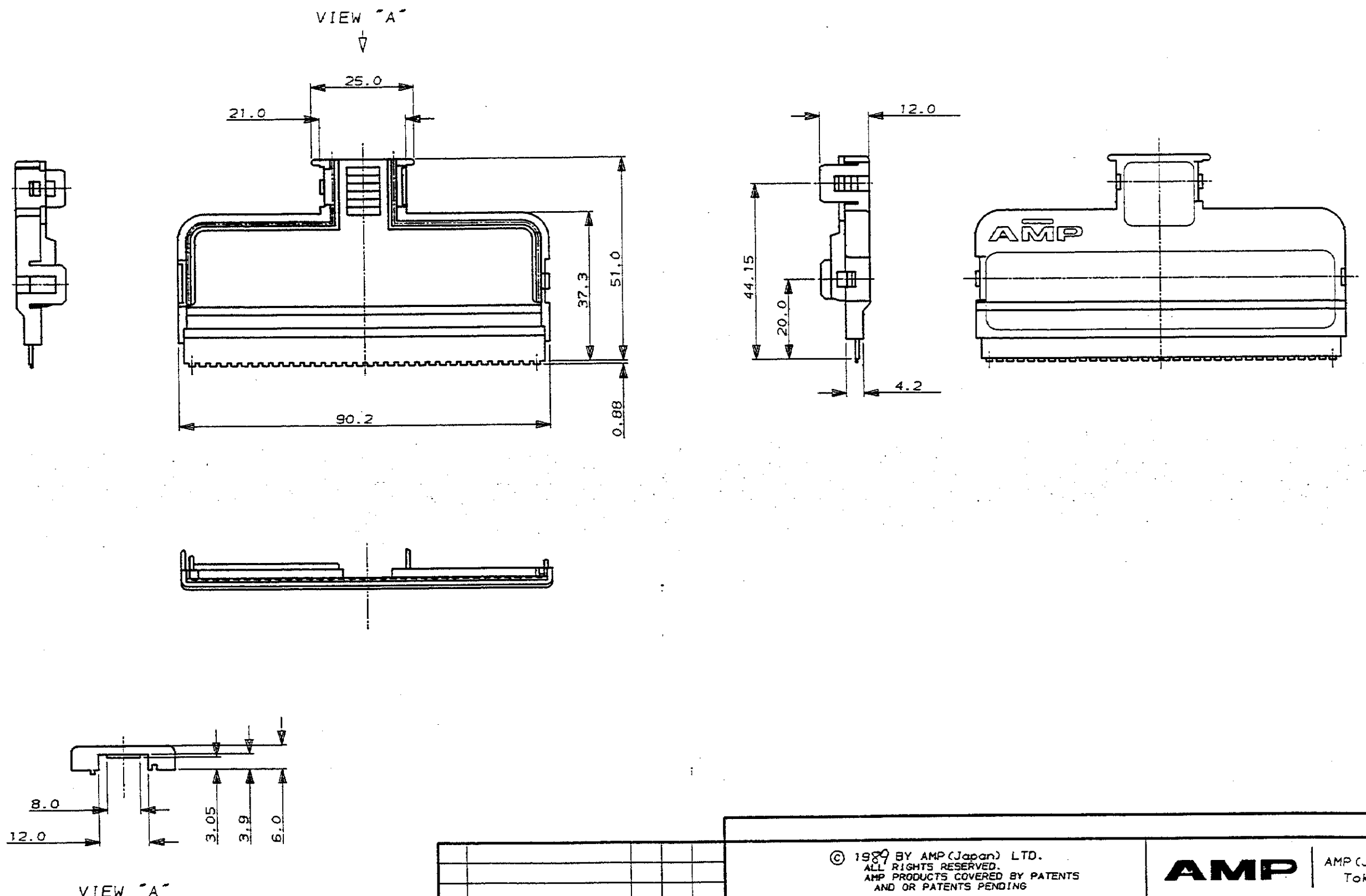

NUMBER C-175601

3rd ANGLE PROJECTION

METRIC

DIMENSIONS IN MILLIMETERS. DO NOT SCALE PRINT

PRINT DIST

LTR	REVISION RECORD	DR	CHK	DATE
A	改訂 REDRAW J-10920	H.A	T.Sa	6/12-'89

© 1989 BY AMP (Japan) LTD.
ALL RIGHTS RESERVED.
AMP PRODUCTS COVERED BY PATENTS
AND OR PATENTS PENDING

AMP — AMP (JAPAN), LTD. Tokyo, Japan

WIRE RANGE — mm² (AWG -)	INSULATION DIA 9.3-11.2 mmø	NAME CABLE COVER 68P S200 CONN. SYSTEM (W-T-B)	
MATERIAL ポリカーボネイト (黒)	FINISH —	GENERAL TOLERANCE 0<x≤10 : ±0.2; 10<x≤30 : ±0.25; 30<x≤100 : ±0.3; ANGLES : ±3°	SIZE A3 / LOC J / NUMBER C-175601
DR. H. Amikura 4/26 '89	DE. H. Amikura 4/26 '89		SCALE 1-1 / REV. A / SHEET 1 OF 1
CHK. T. Sasaki 5/12 '89	APP. [signature] 6/13/89		

CUSTOMER DRAWING

AMP-J
REV.10/'83