THIS DRAWING IS UNPUBLISHED. RELEASED FOR PUBLICATION 20
© COPYRIGHT 20 BY - ALL RIGHTS RESERVED.

REVISIONS

P	LTR	DESCRIPTION	DATE	DWN	APVD
	0	H-9527	10-02-92	JvL	RotB
	A	H-9765	13MAY92	LvdH	RotB
	B	EH-0896-93	18-11-93	DK	RotB
	B1	ECR-13-014597	01JAN2014	JBJH	GB

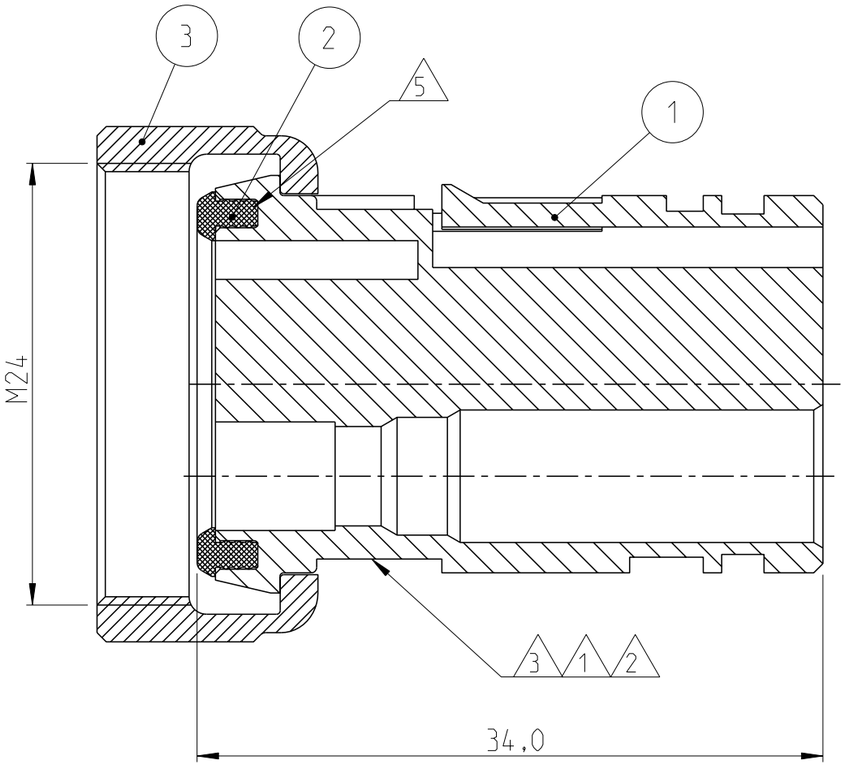

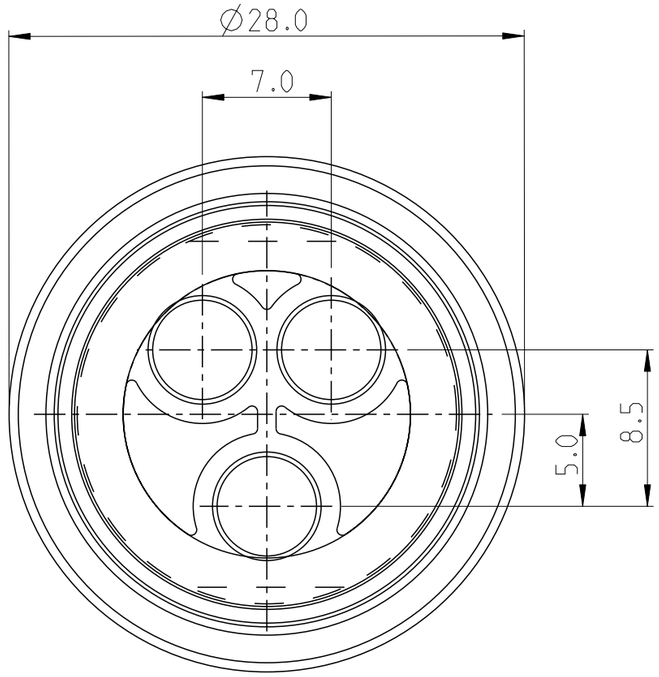

NOTES:

1. TE-TRADEMARK PER SPEC.
2. TE-IDENTIFICATION NUMBER ACC. DIN 1451 MITTLESCHR. HEIGHT 1.2
3. TE-MOLD IDENTIFICATION NUMBER
4. CAVITY FOR:

   1 4mm. SOCKET CONTACT
   WIRE SIZE 0.5-4mm²
   SEE DRAWING NR. 962952-1
   NR. 962954-1
   NR. 962956-1

   2 SCAT SEE DRAWING NR. 963243-1
   NR. 963244-1

5. SEAL BONDED IN INSERT.

-1 AS SHOWN

MATERIAL	DESCRIPTION	COLOUR/FINISH (B1)	PART NUMBER	ITEM
BRASS	NUT M24	BRASS	100296-1	3
SILICON RUBBER	SEALING RING	BLACK	100294-1	2
PBT	3-POS. HOUSING	BLACK	100289-1	1

THIS DRAWING IS A CONTROLLED DOCUMENT.

DIMENSIONS: mm

TOLERANCES UNLESS OTHERWISE SPECIFIED:
0 PLC ±-
1 PLC ±0.2
2 PLC ±0.02
3 PLC ±0.005
4 PLC ±-
ANGLES ±1°

MATERIAL: -
FINISH: -

DWN J.v.LIEMPT 01JAN2001
CHK R.o.t.BERG. 01JAN2001
APVD L.v.SOEST. 01JAN2001
PRODUCT SPEC: -
APPLICATION SPEC: -
WEIGHT: -

TE Connectivity

NAME: ASSY 3 POS HOUSING FOR 4mm. SOCKET CONTACT M24 VERSION

SIZE	CAGE CODE	DRAWING NO	RESTRICTED TO
A3	00779	C-100285	-

CUSTOMER DRAWING | SCALE 5:1 | SHEET 1 OF 1 | REV B1