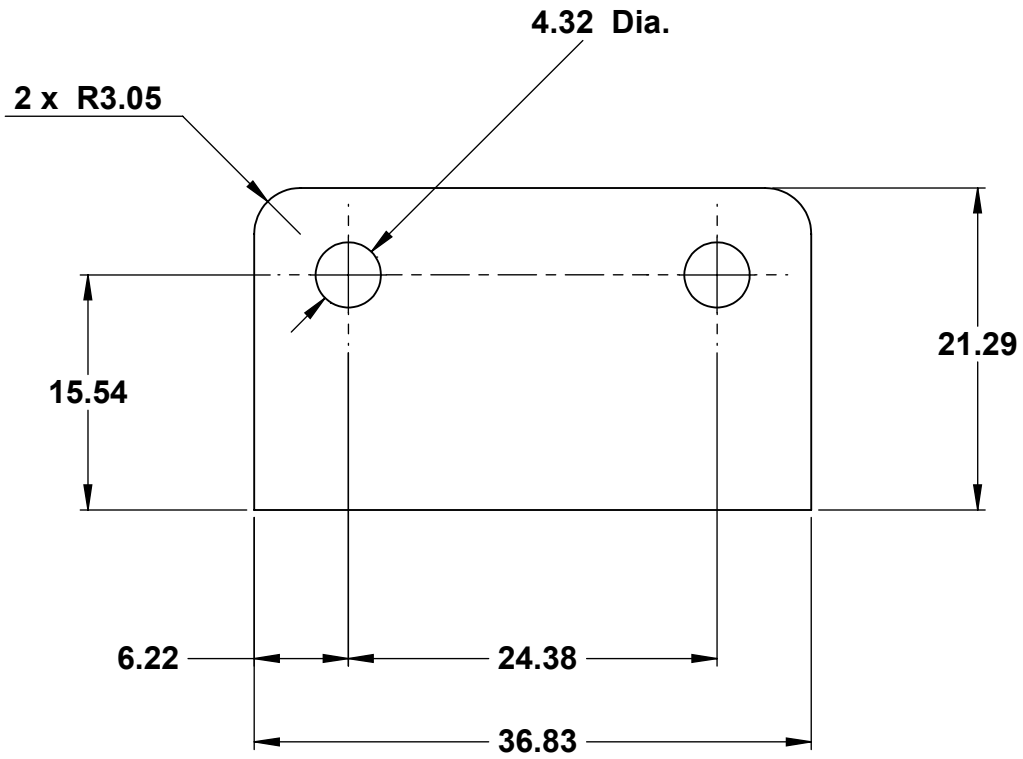

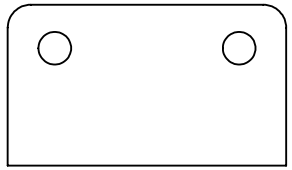

REFERENCE VIEW

Scale: Full Size

UNLESS OTHERWISE SPECIFIED:
DIMENSIONS ARE IN Millmetres
SURFACE FINISH:
TOLERANCES:
LINEAR:
ANGULAR:

	NAME	DATE
DRAWN	L. Simpson	17th March 2012
CHK'D		
APPV'D		
MFG		
Q.A		

DEBUR AND BREAK SHARP EDGES

MATERIAL: t-Global Phase Change Material H48-2K

DC0025/01-Material Ref.-Thickness(mm.)

Ordering No. DC0025/01-H48-2K-0.1(mm.)

TITLE: t-Global Technology

PART No. DC0025/01-H48-2K-0.1(mm.)

A4

WEIGHT:

SCALE: 2:1

SHEET 1 OF 1