REVISION F

DO NOT SCALE FROM THIS PRINT

DESIGNED & DIMENSIONED IN MILLIMETERS[INCHES]

SMB5-J-P-XX-RA-TH1

GENDER
-J: JACK

TYPE
-P: PCB

TERMINATION
-TH1: THROUGH HOLE

ORIENTATION
-RA: RIGHT ANGLE

PLATING SPECIFICATION
(VALUES GIVEN ARE IN MICRO-INCHES)
-HN: HEAVY GOLD / NICKEL
30 Au / 50 Ni MIN ON PIN
3 Au / 50 Ni MIN ON OUTER CONTACT
100 Ni ON BODY
-H: HEAVY GOLD
30 Au / 50 Ni MIN ON PIN
3 Au / 50 Ni MIN ON OUTER CONTACT AND BODY
(SEE TABLE 1)

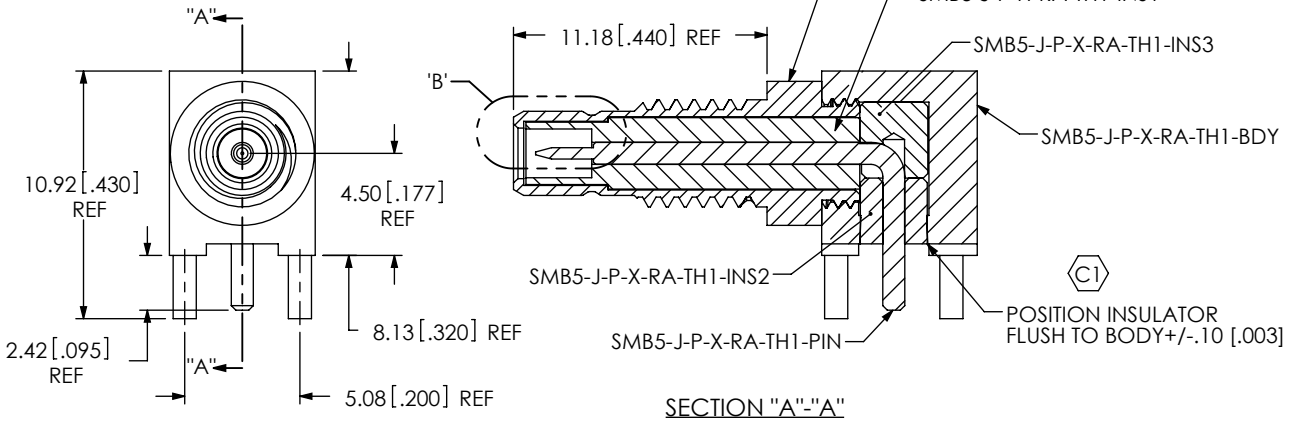

SECTION "A"-"A"

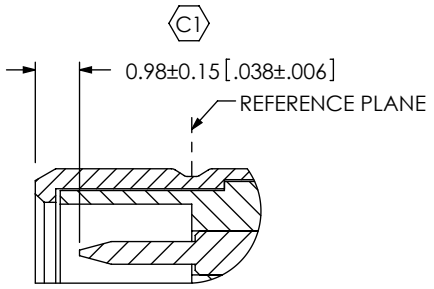

DETAIL 'B'
SCALE 6 : 1

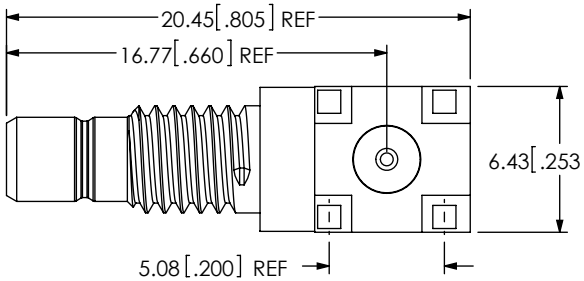

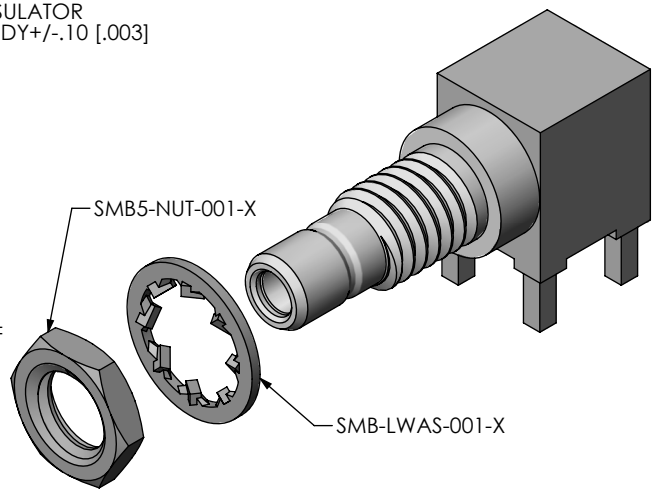

TABLE 1			
ITEM	COMPONENT	-HN	-H
1	SHELL	SMB5-J-P-F-RA-TH1-SHL	
2	PIN	SMB5-J-P-H-RA-TH1-PIN	
3	BODY	SMB5-J-P-N-RA-TH1-BDY	SMB5-J-P-F-RA-TH1-BDY
4	INSULATOR 1	SMB5-J-P-RA-TH1-INS1	
5	INSULATOR 2	SMB5-J-P-RA-TH1-INS2	
6	INSULATOR 3	SMB5-J-P-RA-TH1-INS3	

RECOMMENDED MOUNTING HOLE
3.81 [.150] MAX. PANEL THICKNESS

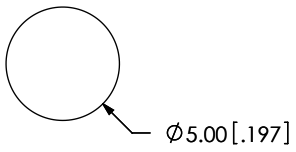

RECOMMENDED PCB LAYOUT

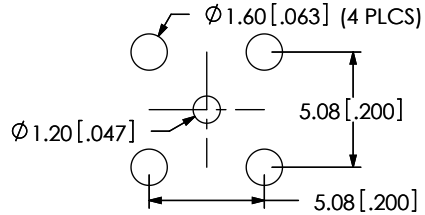

NOTES:

1. Ⓒ REPRESENTS A CRITICAL DIMENSION.
2. PUSHOUT FORCE FOR INSULATOR: 17.79 N [4.0 LB] MIN.
3. PARTS TO BE PACKAGED IN TRAYS; IF QUANTITY IS LESS THAN HALF TRAY, PRODUCT TO BE PACKAGED PER PACKAGING STANDARD CO-RF-WI-3040-M.
4. RoHs COMPLIANT.

F:\DWG\MISC\MKTG\SMB5-J-P-XX-RA-TH1-MKT.SLDDRW

UNLESS OTHERWISE SPECIFIED, DIMENSIONS ARE IN MILLIMETERS [INCHES]. TOLERANCES ARE:
DECIMALS
.X: ±0.3 [.01]
.XX: ±0.13 [.005]
.XXX: ±0.051 [.0020]
ANGLES
5 °

* PROPRIETARY NOTE *
THIS DOCUMENT CONTAINS CONFIDENTIAL AND PROPRIETARY INFORMATION AND ALL DESIGN, MANUFACTURING, REPRODUCTION, USE, PATENT RIGHTS AND SALES RIGHTS ARE EXPRESSLY RESERVED BY SAMTEC, INC. THIS DOCUMENT SHALL NOT BE DISCLOSED, IN WHOLE OR PART, TO ANY UNAUTHORIZED PERSON OR ENTITY NOR REPRODUCED, TRANSFERRED OR INCORPORATED IN ANY OTHER PROJECT IN ANY MANNER WITHOUT THE EXPRESS WRITTEN CONSENT OF SAMTEC, INC.

520 PARK EAST BLVD, NEW ALBANY, IN 47150
PHONE: 812-944-6733 FAX: 812-948-5047
e-Mail: info@SAMTEC.com code: 55322

MATERIAL: DO NOT SCALE DRAWING SHEET SCALE: 1:0.333333

DESCRIPTION:
SMB5 RIGHT ANGLE, THOUGH HOLE- 50 OHM

DWG. NO.
SMB5-J-P-XX-RA-TH1

BY: G. HERMAN 03/20/2008 SHEET 1 OF 1