REVISION J

DO NOT SCALE FROM THIS PRINT

TABLE 1			
ITEM	COMPONENT	HH	GF
1	SUB ASSEMBLY	SUB-CJT-T-P-HH-RA-BH1	SUB-CJT-T-P-GF-RA-BH1
2	NUT	SMA-NUT-001-F	
3	WASHER	SMA-LWAS-001-F	
4	GASKET	CJT-GKT-001	

DESIGNED & DIMENSIONED IN MILLIMETERS[INCHES]

CJT-T-P-XX-RA-BH1

GENDER
-J: JACK

TYPE
-T: TERMINAL

TYPE
-P: PCB

ORIENTATION
-RA: RIGHT ANGLE

TERMINATION
-BH1: BULKHEAD THROUGH HOLE

PLATING SPECIFICATION
-HH: HEAVY GOLD / HEAVY GOLD
30µ" Au / 50µ" Ni MIN ON PIN
30µ" Au / 50µ" Ni MIN ON OUTER CONTACT
-GF: GOLD / FLASH GOLD
10µ" Au / 50µ" Ni MIN ON PIN
3µ" Au / 50µ" Ni MIN ON OUTER CONTACT
(SEE TABLE 1)

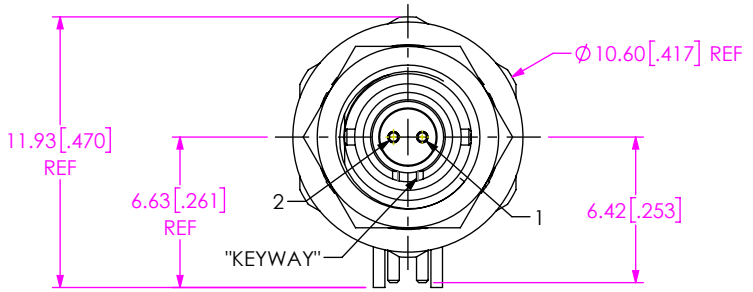

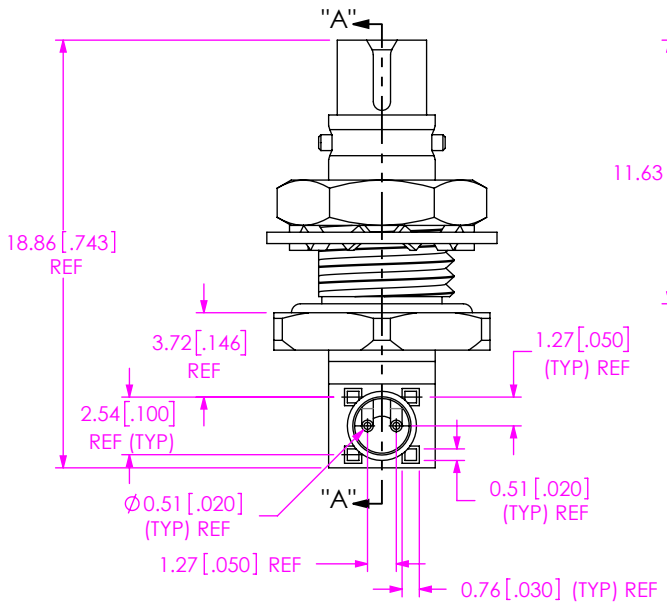

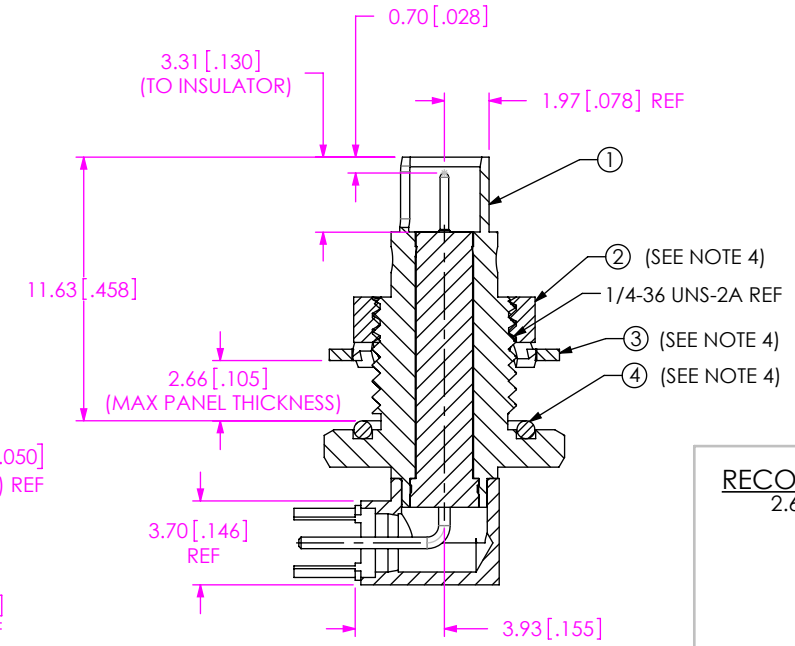

SECTION "A"-"A"

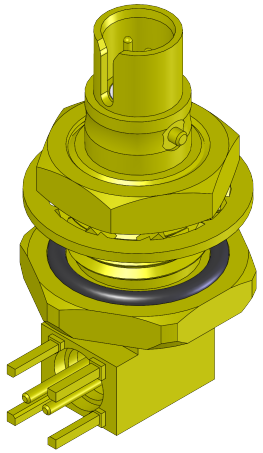

RECOMMENDED MOUNTING HOLE

2.66 [.105] MAX PANEL THICKNESS

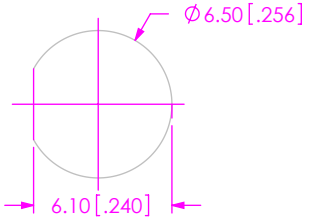

NOTES:

1. REPRESENTS A CRITICAL DIMENSION.
2. MINIMUM PUSHOUT FORCE FOR CENTER CONTACT: 10 N [2.25 LB].
INSULATOR: 20 N [4.5 LB].
3. PRODUCT TO BE PACKAGED PER PRECISION RF SECTION OF PACKAGING MANUAL.
4. NUT, WASHER, AND GASKET ARE PACKAGED SEPARATELY.
5. CONNECTOR TO BE 100% HI-POT TESTED AT 700VDC.

F:\DWG\SW\Exisprod\Assembly\Rf\CXT\CJT-T-P-XX-RA-BH1\CJT-T-P-XX-RA-BH1.slddrw

UNLESS OTHERWISE SPECIFIED, DIMENSIONS ARE IN MILLIMETERS.
TOLERANCES ARE:
DECIMALS ANGLES
X.X: ±0.3 [.01] 5°
X.XX: ±0.13 [.005]
X.XXX: ±0.051 [.0020]

* PROPRIETARY NOTE *
THIS DOCUMENT CONTAINS CONFIDENTIAL AND PROPRIETARY INFORMATION AND ALL DESIGN, MANUFACTURING, REPRODUCTION, USE, PATENT RIGHTS AND SALES RIGHTS ARE EXPRESSLY RESERVED BY SAMTEC, INC. THIS DOCUMENT SHALL NOT BE DISCLOSED, IN WHOLE OR PART, TO ANY UNAUTHORIZED PERSON OR ENTITY NOR REPRODUCED, TRANSFERRED OR INCORPORATED IN ANY OTHER PROJECT IN ANY MANNER WITHOUT THE EXPRESS WRITTEN CONSENT OF SAMTEC, INC.

samtec
520 PARK EAST BLVD, NEW ALBANY, IN 47150
PHONE: 812-944-6733 FAX: 812-948-5047
e-Mail info@SAMTEC.com code 55322

MATERIAL: DO NOT SCALE DRAWING SHEET SCALE: 3:1

CONTACT: PHOS BRONZE
OTHER METAL: BRASS
DIELECTRIC: PTFE
GASKET: SILICONE

DESCRIPTION:
CIRCULAR TWIN-AX JACK RIGHT ANGLE BULKHEAD

DWG. NO.
CJT-T-P-XX-RA-BH1

BY: ALVIN W 12/01/2010 SHEET 1 OF 2

REVISION J

RECOMMENDED **PCB** LAYOUT

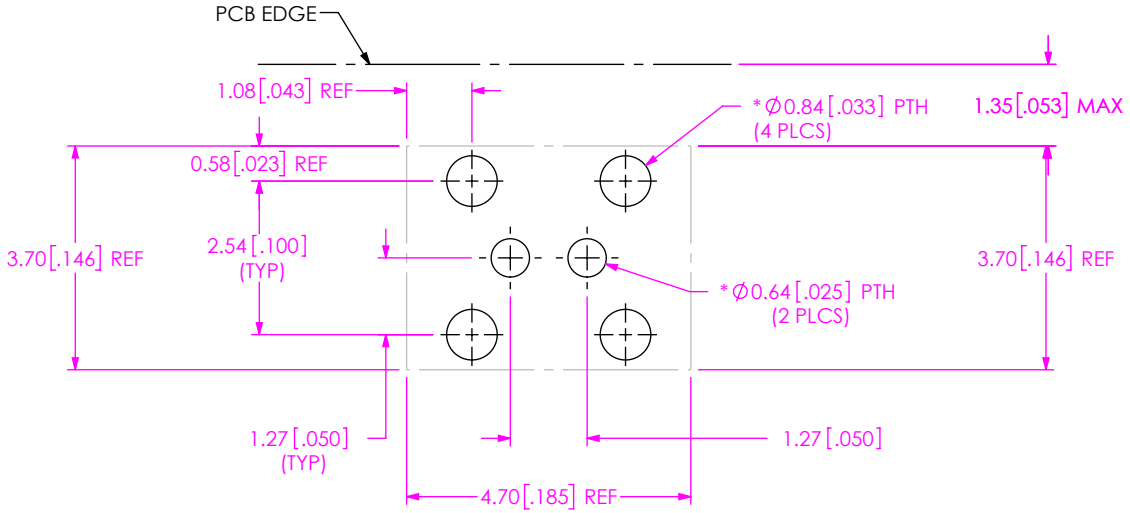

* TO BE SOLDERED USING PASTE-IN-HOLE TECHNOLOGY.

RECOMMENDED **STENCIL** LAYOUT

NOTE:
STENCIL TO BE .152[.0060] THICK

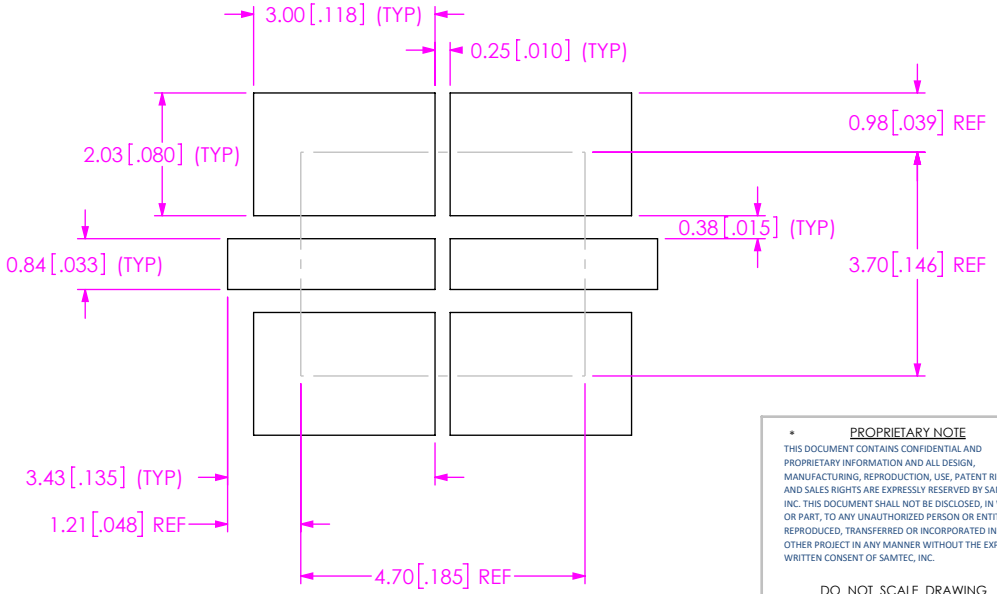

F:\DWG\SW\Exisprod\Assembly\Rf\CXT\CJT-T-P-XX-RA-BH1\CJT-T-P-XX-RA-BH1.slddrw

* PROPRIETARY NOTE *

THIS DOCUMENT CONTAINS CONFIDENTIAL AND PROPRIETARY INFORMATION AND ALL DESIGN, MANUFACTURING, REPRODUCTION, USE, PATENT RIGHTS AND SALES RIGHTS ARE EXPRESSLY RESERVED BY SAMTEC, INC. THIS DOCUMENT SHALL NOT BE DISCLOSED, IN WHOLE OR PART, TO ANY UNAUTHORIZED PERSON OR ENTITY NOR REPRODUCED, TRANSFERRED OR INCORPORATED IN ANY OTHER PROJECT IN ANY MANNER WITHOUT THE EXPRESS WRITTEN CONSENT OF SAMTEC, INC.

DO NOT SCALE DRAWING

SHEET SCALE: 8:1

520 PARK EAST BLVD, NEW ALBANY, IN 47150
PHONE: 812-944-6733 FAX: 812-948-5047
e-Mail info@SAMTEC.com code 55322

DESCRIPTION:
CIRCULAR TWIN-AX JACK RIGHT ANGLE BULKHEAD

DWG. NO. CJT-T-P-XX-RA-BH1

BY: ALVIN W 12/01/2010 SHEET 2 OF 2