REVISION V

DO NOT SCALE FROM THIS PRINT

DESIGNED & DIMENSIONED IN MILLIMETERS[INCHES]

PETC-XX-XX-XX-01-X-RA-XX-X

- ∗ POWER POSITIONS (PER END): -01, -02, -04
- ∗SIGNAL POSITIONS: -12, -40
- ∗ POWER POSITIONS (PER END): -01, -02, -04
- LEAD STYLE: -01
- RIGHT ANGLE
- PLATING SPECIFICATION:
  - -S: 30µ" SELECTIVE GOLD IN CONTACT AREA, MATTE TIN ON TAIL
  - -T: MATTE TIN CONTACT AND TAIL
  - -L: 10µ" LIGHT SELECTIVE GOLD IN CONTACT AREA, MATTE TIN ON TAIL
- OPTION ∗∗:
  - -SD: SCREW DOWN (SEE FIG 1, SHT 1)
  - -LC: LOCKING CLIP (USE LC-11-TM) (SEE FIG 2, SHT 2)
- OPTION: -L: LATCH EARS (SEE FIG 5, SHT 3)

∗ - SEE TABLE 1 FOR AVAILABLE COMBINATIONS
∗∗ - BLANK ONLY FOR EXISTING CUSTOMERS

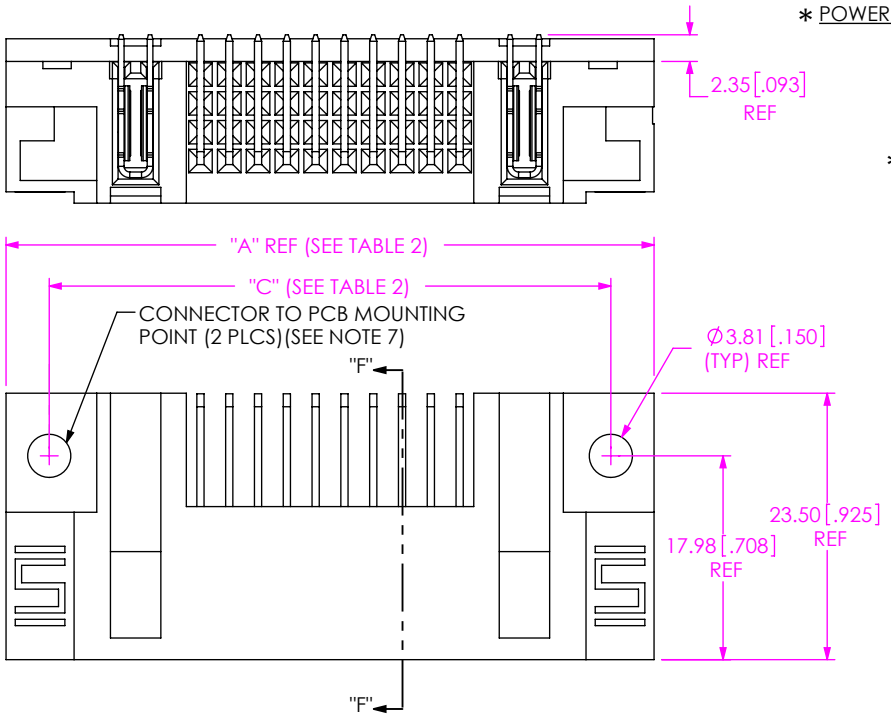

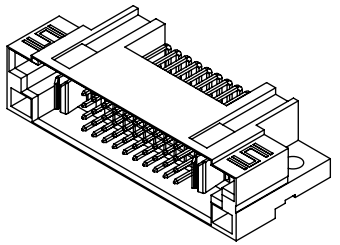

TABLE 1		
PART NUMBER	⧄ MAX	"E"
PETC-01-40-01-01-X-RA-XX	0.15 [.006]	9
PETC-02-40-02-01-X-RA-XX	0.15 [.006]	9
PETC-04-40-04-01-X-RA-XX	0.20 [.008]	9
PETC-01-12-01-01-X-RA-XX	0.15 [.006]	2
PETC-02-12-02-01-X-RA-XX	0.15 [.006]	2
PETC-04-12-04-01-X-RA-XX	0.15 [.006]	2

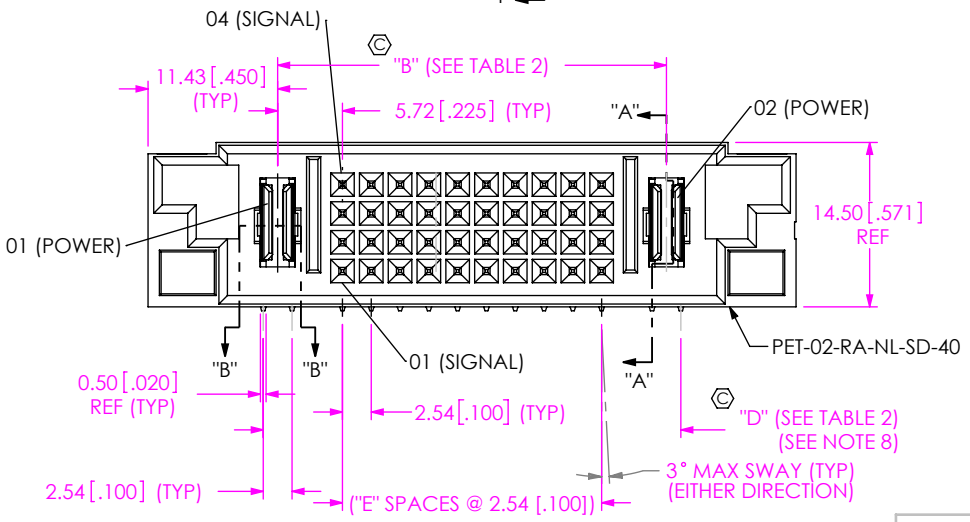

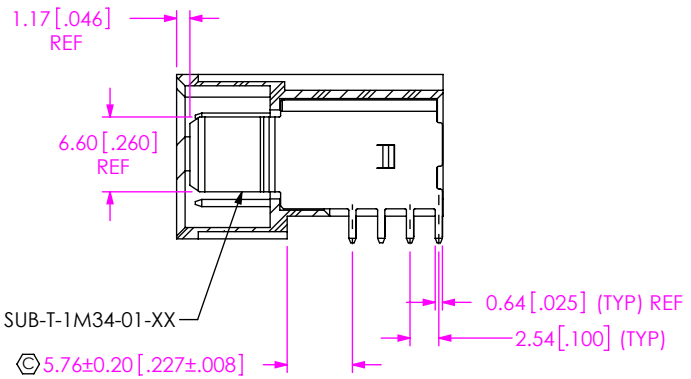

SECTION "A"-"A"

NOTES:

1. Ⓒ REPRESENTS A CRITICAL DIMENSION.
2. MAXIMUM BURR ALLOWANCE: 0.13[.005]
3. MINIMUM PUSHOUT FORCE: 2.22N [.5 LB].
4. PARTS TO BE PACKAGED IN TRAYS.
5. PARTS PLACED IN TRAY WITH PIN #1 FACING THE RIGHT SIDE, DUE TO PIN NUMBERING ORDER.
6. IF EMPTY SPACE EXISTS IN THE TRAY POCKETS, INSERT A PLUG TP-07 PLACED IN THE POCKET SO THAT THE FLAT EDGE LAYS FLAT IN THE BOTTOM OF THE POCKET AND THE PLUG IS AGAINST THE CONNECTOR.
7. TORQUE TO BE 20 IN-OZ USING 6-32 UNC, 6-40 UNF OR M3 SCREW.
8. TO BE MEASURED FROM FRONT SIDE ONLY.

FIG 1
PETC-01-40-01-X-RA-SD SHOWN

UNLESS OTHERWISE SPECIFIED, DIMENSIONS ARE IN MILLIMETERS.
TOLERANCES ARE:
DECIMALS: .X: ±0.3 [.01], .XX: ±0.13 [.005], .XXX: ±0.051 [.0020]
ANGLES: 2 °

∗ PROPRIETARY NOTE ∗
THIS DOCUMENT CONTAINS CONFIDENTIAL AND PROPRIETARY INFORMATION AND ALL DESIGN, MANUFACTURING, REPRODUCTION, USE, PATENT RIGHTS AND SALES RIGHTS ARE EXPRESSLY RESERVED BY SAMTEC, INC. THIS DOCUMENT SHALL NOT BE DISCLOSED, IN WHOLE OR PART, TO ANY UNAUTHORIZED PERSON OR ENTITY NOR REPRODUCED, TRANSFERRED OR INCORPORATED IN ANY OTHER PROJECT IN ANY MANNER WITHOUT THE EXPRESS WRITTEN CONSENT OF SAMTEC, INC.

MATERIAL: INSULATOR: LCP, COLOR: BLACK
TERMINAL: COPPER ALLOY

DO NOT SCALE DRAWING SHEET SCALE: 1:0.666667

c:\enterprisevault\DWG\MISC\MKTG\PETC-XX-XX-XX-01-X-RA-XX-X-MKT.SLDDRW

samtec
520 PARK EAST BLVD, NEW ALBANY, IN 47150
PHONE: 812-944-6733 FAX: 812-948-5047
e-Mail info@SAMTEC.com code 55322

DESCRIPTION: RIGHT ANGLE POWER TERMINAL

DWG. NO. PETC-XX-XX-XX-01-X-RA-XX-X

BY: CLAY W 1/12/2006 SHEET 1 OF 3

REVISION V

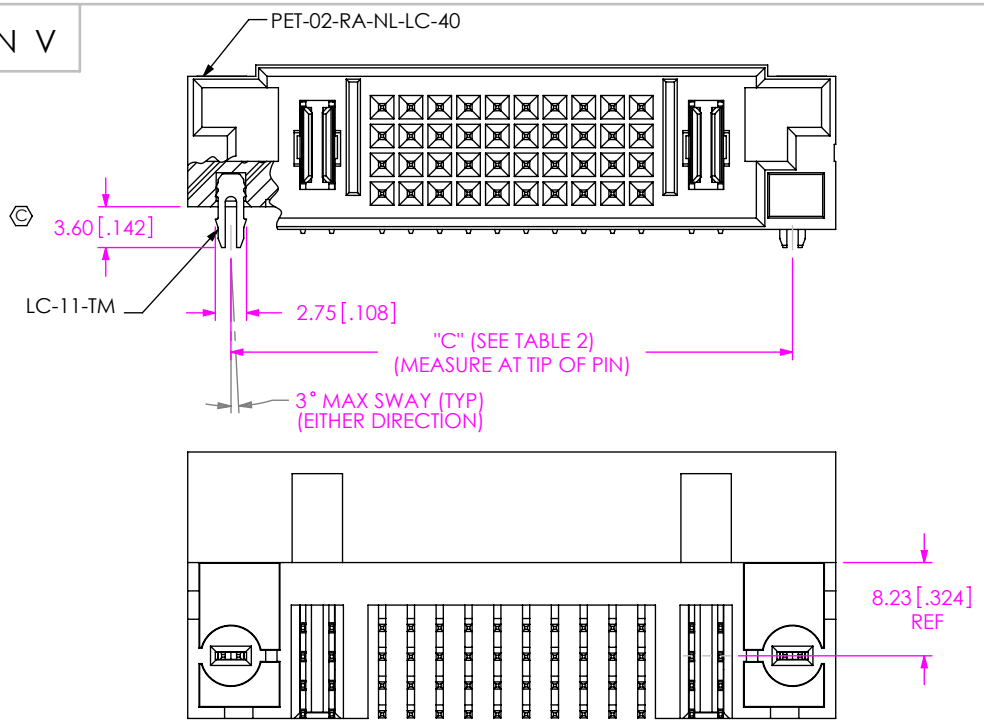

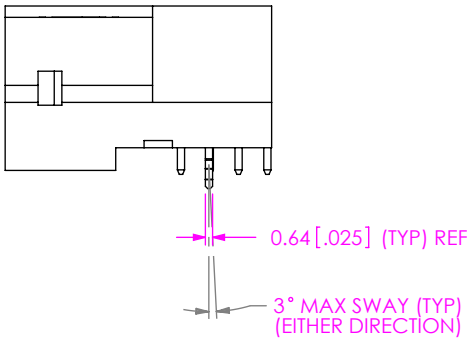

FIG 2
PETC-01-40-01-01-X-RA-LC SHOWN
(SAME AS FIG 1, UNLESS OTHERWISE STATED)

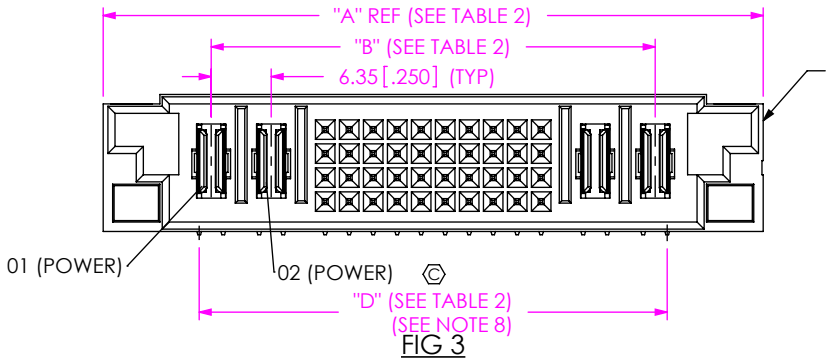

FIG 3
PETC-02-40-02-01-X-RA-SD SHOWN
(SAME AS FIG 1, UNLESS OTHERWISE STATED)

TABLE 2

PART NUMBER	"A"	"B"	"C"	"D"
PETC-01-40-01-01-X-RA-XX	57.15 [2.250]	34.29 +0.20 -0.13 [1.350] +.008 -.005	49.53 +0.05 -0.30 [1.950] +.002 -.012	36.83 ±0.20 [1.450] ±.008
PETC-02-40-02-01-X-RA-XX	69.85 [2.750]	46.99 +0.20 -0.13 [1.850] +.008 -.005	62.23 +0.05 -0.35 [2.450] +.002 -.014	49.53 ±0.20 [1.950] ±.008
PETC-04-40-04-01-X-RA-XX	95.25 [3.750]	72.39 +0.25 -0.13 [2.850 +.010 -.005]	87.63 [3.450]	74.93 +0.20 -0.35 [2.950 +.008 -.014]
PETC-01-12-01-01-X-RA-XX	39.37 [1.550]	16.51 +0.20 -0.13 [0.650] +.008 -.005]	31.75 +0.05 -0.35 [1.250] +.002 -.014]	19.05 ±0.20 [0.750] ±.008
PETC-02-12-02-01-X-RA-XX	52.07 [2.050]	29.21 +0.20 -0.13 [1.150] +.008 -.005]	44.45 +0.05 -0.35 [1.750] +.002 -.014]	31.75 ±0.20 [1.250] ±.008
PETC-04-12-04-01-X-RA-XX	77.47 [3.050]	54.61 +0.20 -0.13 [2.150] +.008 -.005]	69.85 +0.05 -0.35 [2.750] +.002 -.014]	57.15 +0.20 -0.35 [2.250] +.008 -.014]

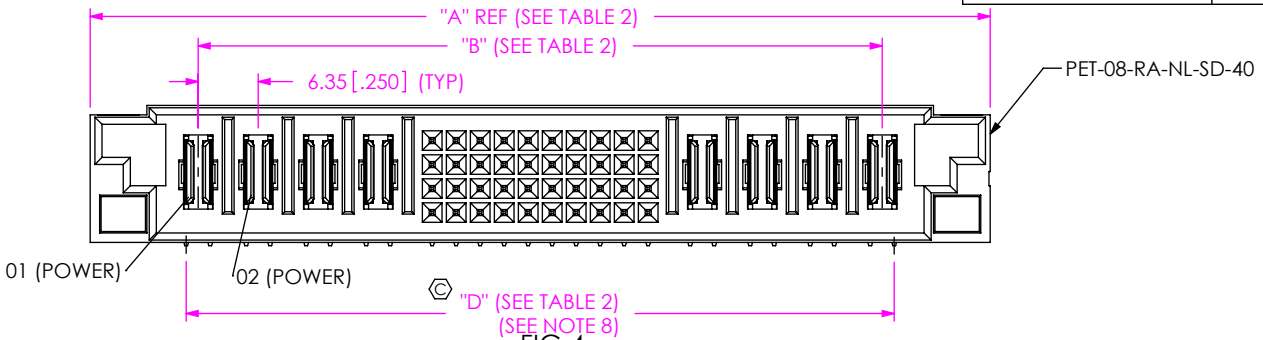

FIG 4
PETC-04-40-04-01-X-RA-SD SHOWN
(SAME AS FIG 1, UNLESS OTHERWISE STATED)

c:\enterprisevault\DWG\MISC\MKTG\PETC-XX-XX-XX-01-X-RA-XX-X-MKT.SLDDRW

PROPRIETARY NOTE

THIS DOCUMENT CONTAINS CONFIDENTIAL AND PROPRIETARY INFORMATION AND ALL DESIGN, MANUFACTURING, REPRODUCTION, USE, PATENT RIGHTS AND SALES RIGHTS ARE EXPRESSLY RESERVED BY SAMTEC, INC. THIS DOCUMENT SHALL NOT BE DISCLOSED, IN WHOLE OR PART, TO ANY UNAUTHORIZED PERSON OR ENTITY NOR REPRODUCED, TRANSFERRED OR INCORPORATED IN ANY OTHER PROJECT IN ANY MANNER WITHOUT THE EXPRESS WRITTEN CONSENT OF SAMTEC, INC.

DO NOT SCALE DRAWING

SHEET SCALE: 1.5:1

samtec
520 PARK EAST BLVD, NEW ALBANY, IN 47150
PHONE: 812-944-6733 FAX: 812-948-5047
e-Mail info@SAMTEC.com code 55322

DESCRIPTION: RIGHT ANGLE POWER TERMINAL

DWG. NO. PETC-XX-XX-XX-01-X-RA-XX-X

BY: CLAY W 1/12/2006

REVISION V

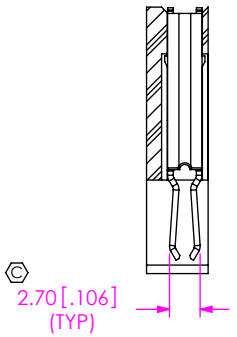

SECTION "B"-"B"

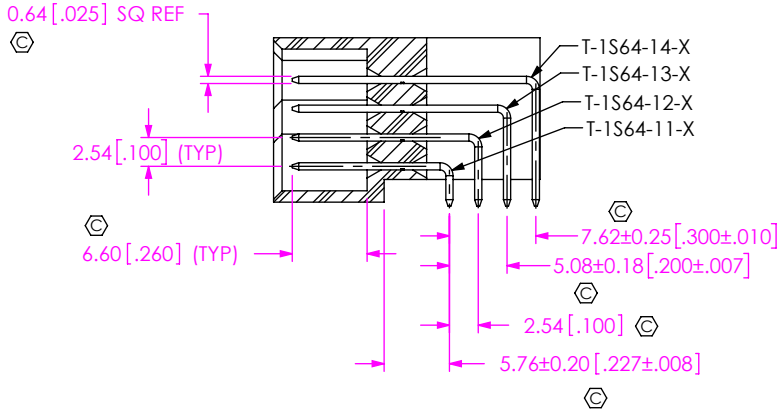

SECTION "F"-"F"

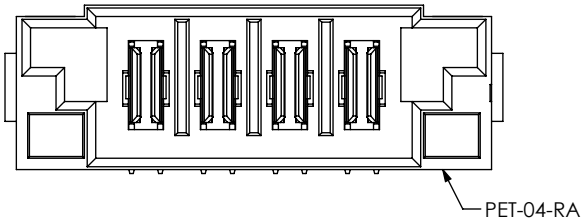

FIG 5
PETC-04-XX-X-RA-L SHOWN
(SAME AS FIG 1, UNLESS OTHERWISE STATED)

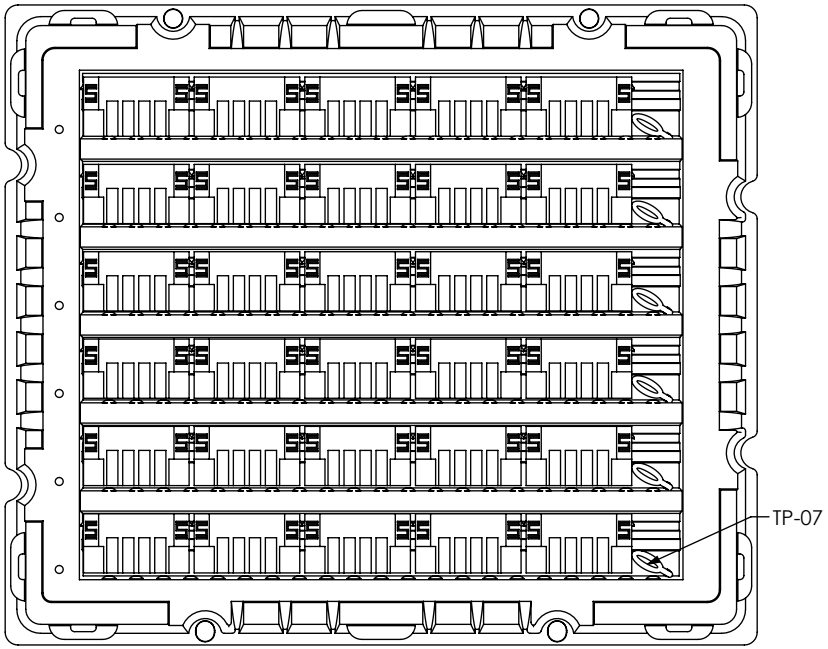

FIG 6
TRAY VIEW
(SEE NOTE 6)

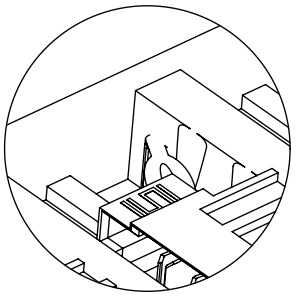

DETAIL 'C'
SCALE 1 : 1

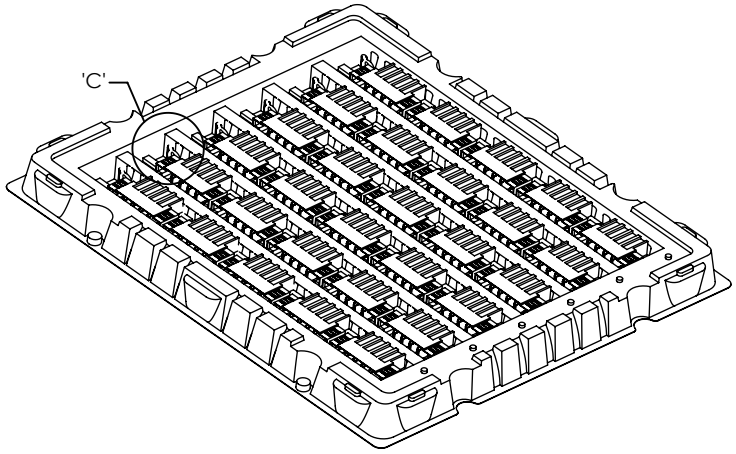

c:\enterprisevault\DWG\MISC\MKTG\PETC-XX-XX-XX-01-X-RA-XX-X-MKT.SLDDRW

* PROPRIETARY NOTE *
THIS DOCUMENT CONTAINS CONFIDENTIAL AND PROPRIETARY INFORMATION AND ALL DESIGN, MANUFACTURING, REPRODUCTION, USE, PATENT RIGHTS AND SALES RIGHTS ARE EXPRESSLY RESERVED BY SAMTEC, INC. THIS DOCUMENT SHALL NOT BE DISCLOSED, IN WHOLE OR PART, TO ANY UNAUTHORIZED PERSON OR ENTITY NOR REPRODUCED, TRANSFERRED OR INCORPORATED IN ANY OTHER PROJECT IN ANY MANNER WITHOUT THE EXPRESS WRITTEN CONSENT OF SAMTEC, INC.

DO NOT SCALE DRAWING

SHEET SCALE: 1.5:1

samtec
520 PARK EAST BLVD, NEW ALBANY, IN 47150
PHONE: 812-944-6733 FAX: 812-948-5047
e-Mail info@SAMTEC.com code 55322

DESCRIPTION:
RIGHT ANGLE POWER TERMINAL

DWG. NO.
PETC-XX-XX-XX-01-X-RA-XX-X

BY: CLAY W 1/12/2006 SHEET 3 OF 3