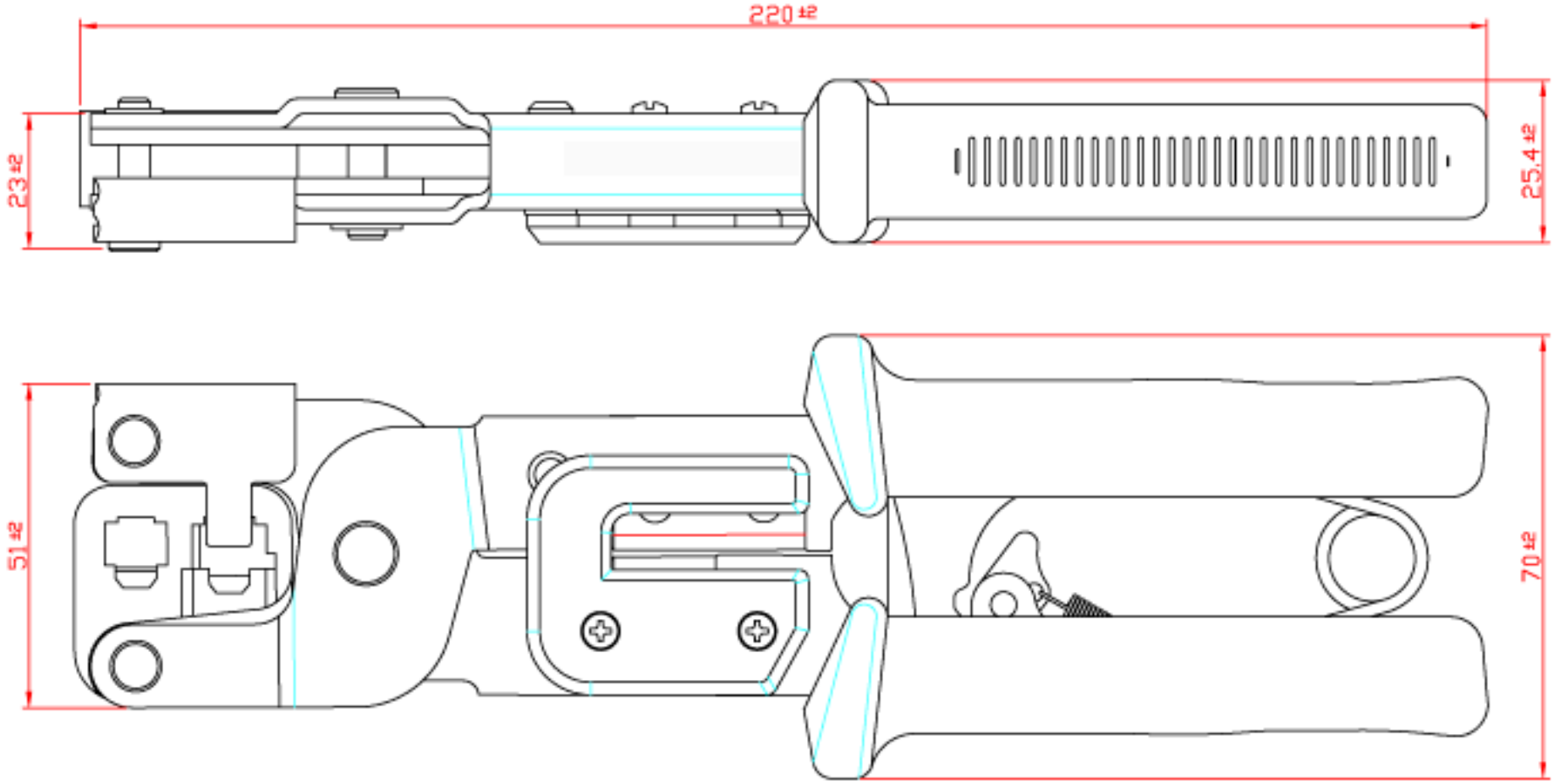


TEL-6001

DIMENSIONS IN MM

QUEST TECHNOLOGY INTERNATIONAL, Inc.