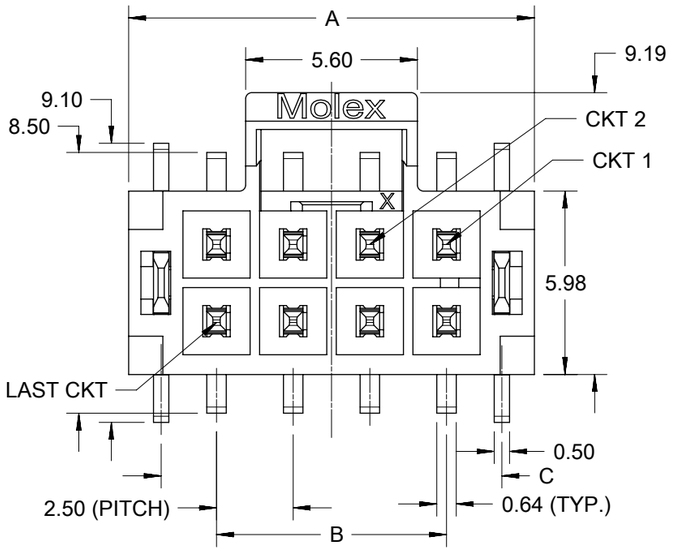

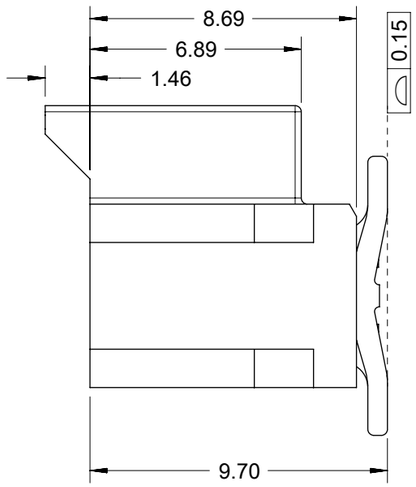

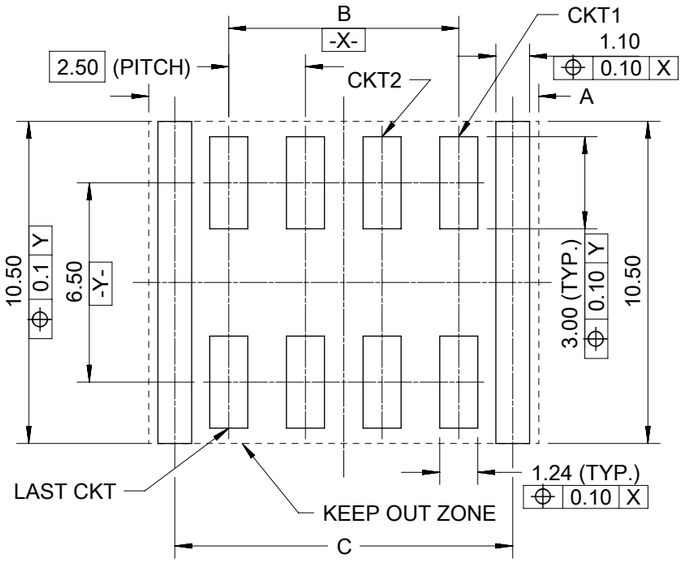

RECOMMENDED PCB LAYOUT(CONNECTOR SIDE VIEW)
THICKNESS=1.6mm MIN. TOLERANCE:±0.05

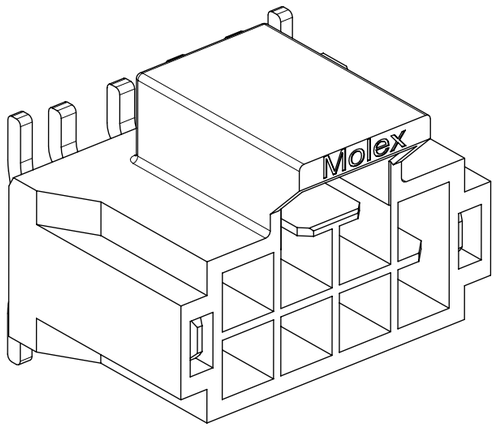

WITHOUT MYLAR

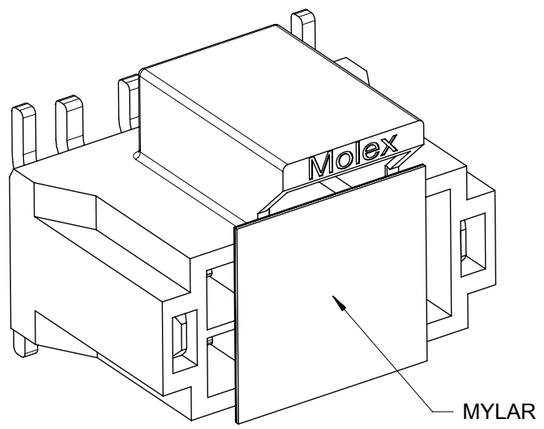

WITH MYLAR
DELIVER TO CUSTOMER

THIS DRAWING CONTAINS INFORMATION THAT IS PROPRIETARY TO MOLEX ELECTRONIC TECHNOLOGIES, LLC AND SHOULD NOT BE USED WITHOUT WRITTEN PERMISSION

DIMENSION UNITS	SCALE
mm	NTS

GENERAL TOLERANCES (UNLESS SPECIFIED)

ANGULAR TOL	±	3.0 °
4 PLACES	±	
3 PLACES	±	
2 PLACES	±	0.2
1 PLACE	±	0.3
0 PLACES	±	

DRAFT WHERE APPLICABLE MUST REMAIN WITHIN DIMENSIONS

CURRENT REV DESC:

EC NO: 826596
DRWN: GLLI 2025/04/28
CHK'D: XQZHANG 2025/06/26
APPR: XQZHANG 2025/06/26

INITIAL REVISION:
DRWN: WJHUO 2014/12/17
APPR: AYIN 2015/03/12

molex

SD DRAWING FOR
NANO-FIT HEADER OF SMT VERTICAL DUAL

PRODUCT CUSTOMER DRAWING

DOCUMENT NUMBER	DOC TYPE	DOC PART	REVISION
SD-105429-001	PSD	000	D1

THIRD ANGLE PROJECTION	DRAWING	SERIES	MATERIAL NUMBER	CUSTOMER	SHEET NUMBER
	A3-SIZE	105429	SEE TABLE	GENERAL MARKET	1 OF 4

DOCUMENT STATUS	P1	RELEASE DATE	2025/06/26 09:45:50

FORMAT: master-tb-prod-A3
REVISION: J1
DATE: 2021/05/01

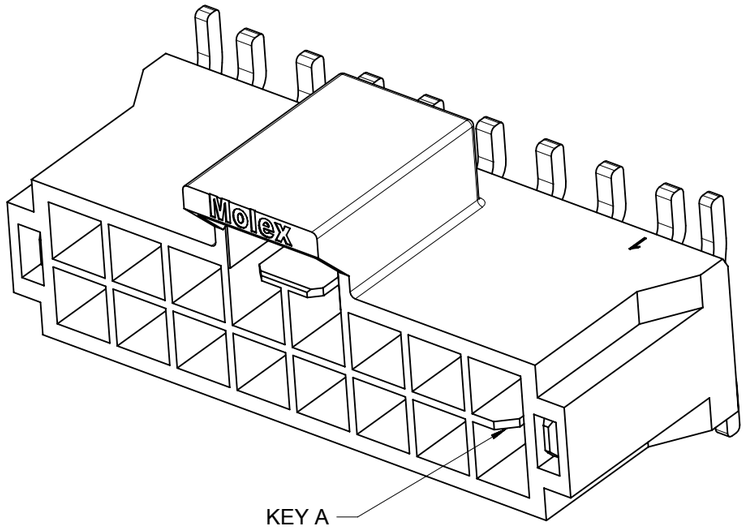

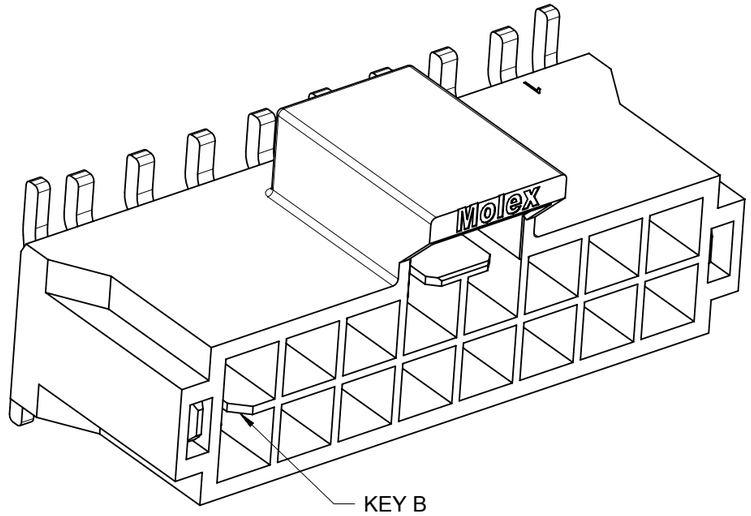

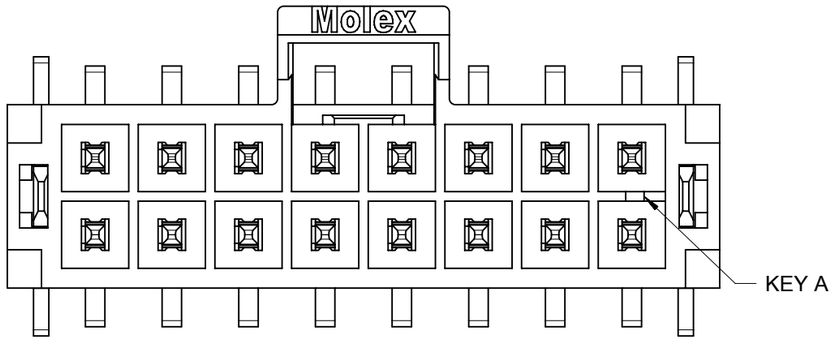

BLACK

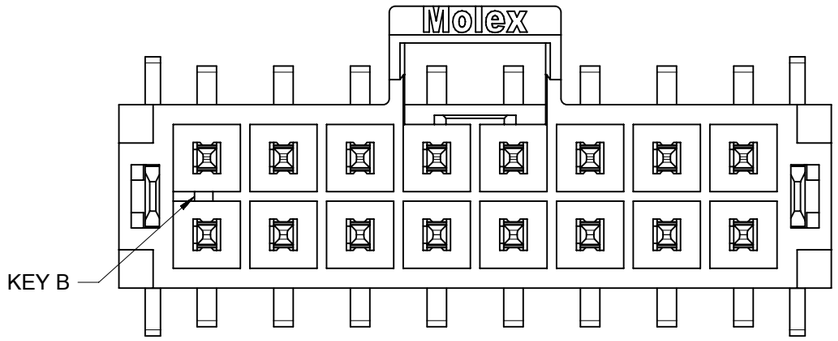

NATURAL

COLOR OPTION

THIS DRAWING CONTAINS INFORMATION THAT IS PROPRIETARY TO MOLEX ELECTRONIC TECHNOLOGIES, LLC AND SHOULD NOT BE USED WITHOUT WRITTEN PERMISSION

DIMENSION UNITS	SCALE
mm	NTS

GENERAL TOLERANCES (UNLESS SPECIFIED)

ANGULAR TOL	±	3.0 °
4 PLACES	±	
3 PLACES	±	
2 PLACES	±	0.2
1 PLACE	±	0.3
0 PLACES	±	

DRAFT WHERE APPLICABLE MUST REMAIN WITHIN DIMENSIONS

CURRENT REV DESC:

EC NO: 826596
DRWN: GLLI 2025/04/28
CHK'D: XQZHANG 2025/06/26
APPR: XQZHANG 2025/06/26

INITIAL REVISION:
DRWN: WJHUO 2014/12/17
APPR: AYIN 2015/03/12

THIRD ANGLE PROJECTION | DRAWING: A3-SIZE | SERIES: 105429

molex

SD DRAWING FOR
NANO-FIT HEADER OF SMT VERTICAL DUAL

PRODUCT CUSTOMER DRAWING

DOCUMENT NUMBER	DOC TYPE	DOC PART	REVISION
SD-105429-001	PSD	000	D1

MATERIAL NUMBER	CUSTOMER	SHEET NUMBER
	GENERAL MARKET	2 OF 4

DOCUMENT STATUS	P1	RELEASE DATE	2025/06/26 09:45:50

FORMAT: master-lb-prod-A3
REVISION: J1
DATE: 2021/05/01

PART NUMBER	DIM. A	DIM. B	DIM. C	CKT SIZE	PLATING	LUBE
105429-1104	8.23	2.50	6.11	4	TIN	NO
105429-1106	10.73	5.00	8.61	6		
105429-1108	13.23	7.50	11.11	8		
105429-1110	15.73	10.00	13.61	10		
105429-1112	18.23	12.50	16.11	12		
105429-1114	20.73	15.00	18.61	14		
105429-1116	23.23	17.50	21.11	16		
105429-1204	8.23	2.50	6.11	4	GOLD 0.38	
105429-1206	10.73	5.00	8.61	6		
105429-1208	13.23	7.50	11.11	8		
105429-1210	15.73	10.00	13.61	10		
105429-1212	18.23	12.50	16.11	12		
105429-1214	20.73	15.00	18.61	14		
105429-1216	23.23	17.50	21.11	16		
105429-1304	8.23	2.50	6.11	4	GOLD 0.76	
105429-1306	10.73	5.00	8.61	6		
105429-1308	13.23	7.50	11.11	8		
105429-1310	15.73	10.00	13.61	10		
105429-1312	18.23	12.50	16.11	12		
105429-1314	20.73	15.00	18.61	14		
105429-1316	23.23	17.50	21.11	16		
105429-1404	8.23	2.50	6.11	4	GOLD 0.76	YES
105429-1406	10.73	5.00	8.61	6		
105429-1408	13.23	7.50	11.11	8		
105429-1410	15.73	10.00	13.61	10		
105429-1412	18.23	12.50	16.11	12		
105429-1414	20.73	15.00	18.61	14		
105429-1416	23.23	17.50	21.11	16		

COLOR: BLACK

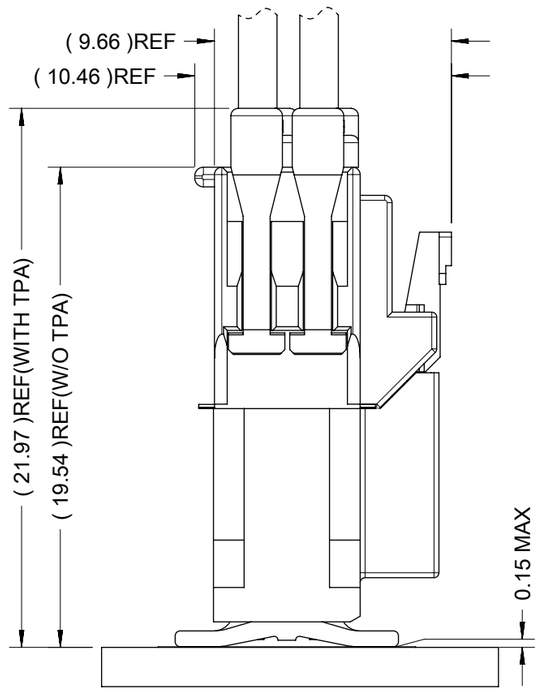

COPLANARITY DETAIL
(SEE NOTE #8)

PART NUMBER	DIM. A	DIM. B	DIM. C	CKT SIZE	PLATING	LUBE
105429-2104	8.23	2.50	6.11	4	TIN	NO
105429-2106	10.73	5.00	8.61	6		
105429-2108	13.23	7.50	11.11	8		
105429-2110	15.73	10.00	13.61	10		
105429-2112	18.23	12.50	16.11	12		
105429-2114	20.73	15.00	18.61	14		
105429-2116	23.23	17.50	21.11	16		
105429-2204	8.23	2.50	6.11	4	GOLD 0.38	
105429-2206	10.73	5.00	8.61	6		
105429-2208	13.23	7.50	11.11	8		
105429-2210	15.73	10.00	13.61	10		
105429-2212	18.23	12.50	16.11	12		
105429-2214	20.73	15.00	18.61	14		
105429-2216	23.23	17.50	21.11	16		
105429-2304	8.23	2.50	6.11	4	GOLD 0.76	
105429-2306	10.73	5.00	8.61	6		
105429-2308	13.23	7.50	11.11	8		
105429-2310	15.73	10.00	13.61	10		
105429-2312	18.23	12.50	16.11	12		
105429-2314	20.73	15.00	18.61	14		
105429-2316	23.23	17.50	21.11	16		
105429-2404	8.23	2.50	6.11	4	GOLD 0.76	YES
105429-2406	10.73	5.00	8.61	6		
105429-2408	13.23	7.50	11.11	8		
105429-2410	15.73	10.00	13.61	10		
105429-2412	18.23	12.50	16.11	12		
105429-2414	20.73	15.00	18.61	14		
105429-2416	23.23	17.50	21.11	16		

COLOR: NATURAL

NOTES FOR ALL PARTS

1> MATERIAL:
HOUSING: LCP, UL 94V-0.
TERMINAL: BRASS.
SOLDER CLIP: BRASS.
2> PLATING FINISHED:
TERMINAL:
CONTACT AREA:
a. REFLOWED MATTE TIN 0.76 MICRONS MIN; b. GOLD 0.38 MICRONS MIN; c. GOLD 0.76 MICRONS MIN.
SOLDER AREA: TIN 0.76 MICRONS MINIMUM.
UNDER PALTING NICKEL 1.25 MICRONS MINIMUM.
SOLDER CLIP: TIN 2.5 MICRONS MINIMUM; UNDER PLATING NICKEL 1.25 MICRONS MINIMUM.

3> PRODUCT SPECIFICATION: PS-105405-001.
4> PACKAGE: TAPE REEL, DETAILS REFER TO DRAWING 1054291000-PK.
5> PRODUCT MATE WITH SERIES OF 105308 AND 226362(RECEPTACLE).
6> PARTS CONFORM TO CLASS 'B' REQUIREMENTS OF COSMETIC SPECIFICATION PS-45499-002.
7> THE COPLANARITY DIMENSION IS ESTABLISHED BY PLACING THE ASSEMBLY ON A FLAT SURFACE. THE DISTANCE FROM THAT SURFACE TO THE BOTTOM OF ANY TERMINAL OR NAIL MUST NOT EXCEED 0.15MM.

THIS DRAWING CONTAINS INFORMATION THAT IS PROPRIETARY TO MOLEX ELECTRONIC TECHNOLOGIES, LLC AND SHOULD NOT BE USED WITHOUT WRITTEN PERMISSION

DIMENSION UNITS	SCALE
mm	NTS

GENERAL TOLERANCES (UNLESS SPECIFIED)

ANGULAR TOL	± 3.0 °
4 PLACES	±
3 PLACES	±
2 PLACES	± 0.2
1 PLACE	± 0.3
0 PLACES	±

DRAFT WHERE APPLICABLE MUST REMAIN WITHIN DIMENSIONS

CURRENT REV DESC:

EC NO: 826596
DRWN: GLLI 2025/04/28
CHK'D: XQZHANG 2025/06/26
APPR: XQZHANG 2025/06/26

INITIAL REVISION:
DRWN: WJHUO 2014/12/17
APPR: AYIN 2015/03/12

molex

SD DRAWING FOR
NANO-FIT HEADER OF SMT VERTICAL DUAL

PRODUCT CUSTOMER DRAWING

DOCUMENT NUMBER	DOC TYPE	DOC PART	REVISION
SD-105429-001	PSD	000	D1

THIRD ANGLE PROJECTION	DRAWING	SERIES	MATERIAL NUMBER	CUSTOMER	SHEET NUMBER
	A3-SIZE	105429	SEE TABLE	GENERAL MARKET	3 OF 4

DOCUMENT STATUS	P1	RELEASE DATE	2025/06/26 09:45:50

FORMAT: master-tb-prod-A3
REVISION: J1
DATE: 2021/05/01

	4 CKT	6 CKT	8 CKT	10 CKT
BLACK	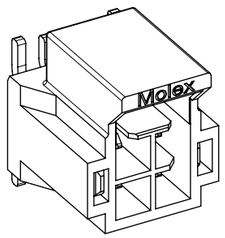	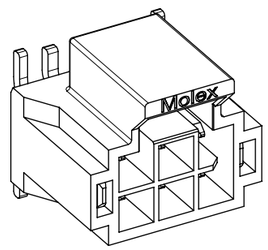	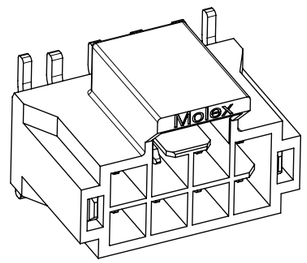	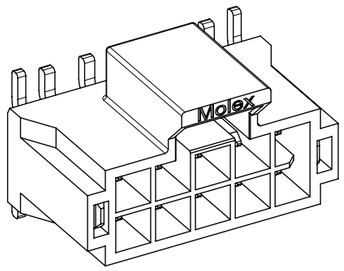
NATURAL	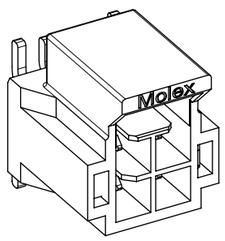	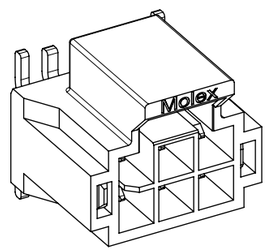	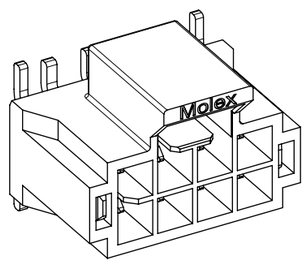	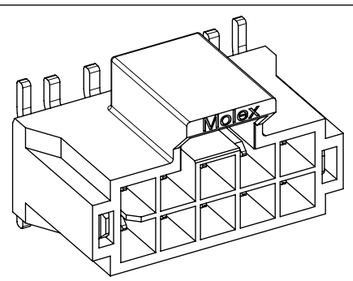

	12 CKT	14 CKT	16 CKT
BLACK	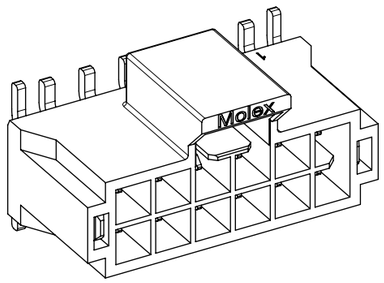	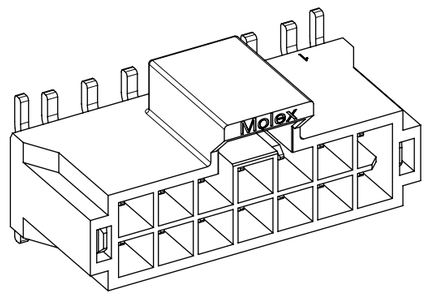	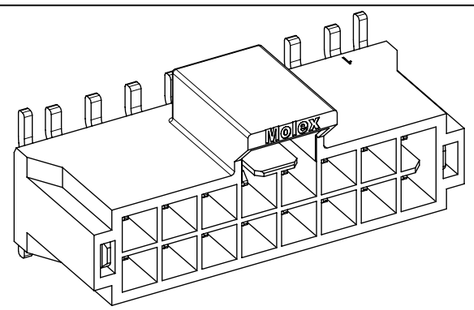
NATURAL	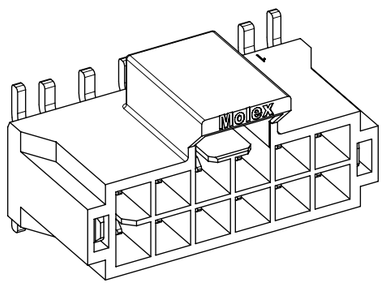	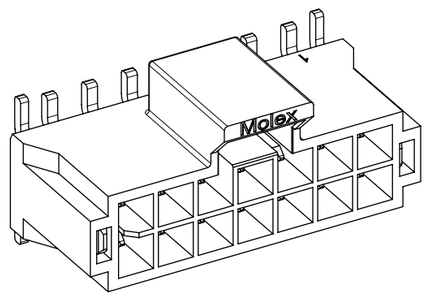	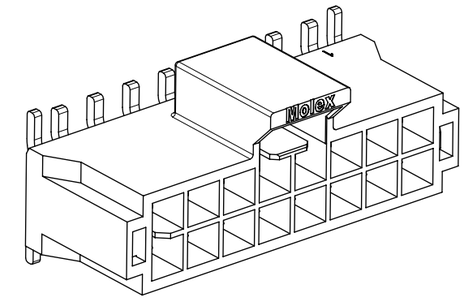

THIS DRAWING CONTAINS INFORMATION THAT IS PROPRIETARY TO MOLEX ELECTRONIC TECHNOLOGIES, LLC AND SHOULD NOT BE USED WITHOUT WRITTEN PERMISSION

DIMENSION UNITS	SCALE
mm	NTS

GENERAL TOLERANCES (UNLESS SPECIFIED)

ANGULAR TOL	±	3.0 °
4 PLACES	±	
3 PLACES	±	
2 PLACES	±	0.2
1 PLACE	±	0.3
0 PLACES	±	

DRAFT WHERE APPLICABLE MUST REMAIN WITHIN DIMENSIONS

CURRENT REV DESC:

EC NO: 826596
DRWN: GLLI 2025/04/28
CHK'D: XQZHANG 2025/06/26
APPR: XQZHANG 2025/06/26

INITIAL REVISION:
DRWN: WJHUO 2014/12/17
APPR: AYIN 2015/03/12

THIRD ANGLE PROJECTION | DRAWING: A3-SIZE | SERIES: 105429

molex

SD DRAWING FOR
NANO-FIT HEADER OF SMT VERTICAL DUAL

PRODUCT CUSTOMER DRAWING

DOCUMENT NUMBER	DOC TYPE	DOC PART	REVISION
SD-105429-001	PSD	000	D1

MATERIAL NUMBER	CUSTOMER	SHEET NUMBER
	GENERAL MARKET	4 OF 4

DOCUMENT STATUS	P1	RELEASE DATE	2025/06/26 09:45:50

FORMAT: master-tb-prod-A3
REVISION: J1
DATE: 2021/05/01