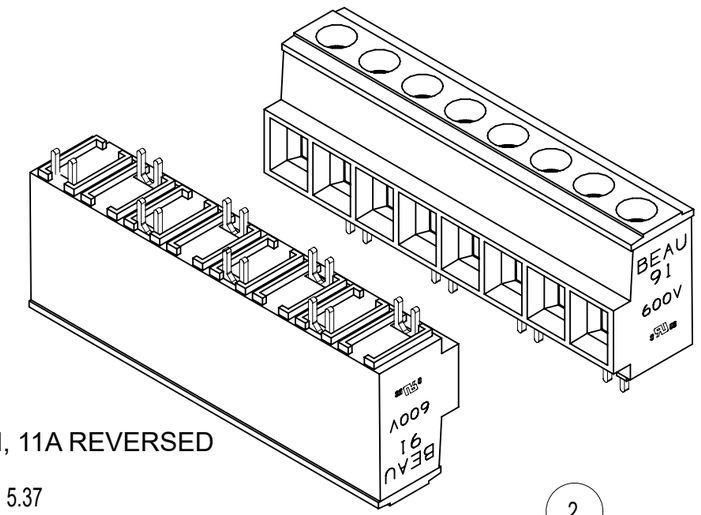

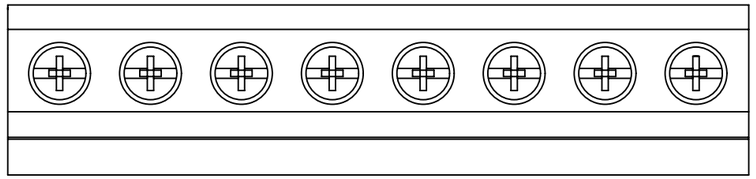

OPTIONAL IMPRINTING, 1/8" 10A SHOWN, 11A REVERSED

RECOMMENDED PTH PATTERN

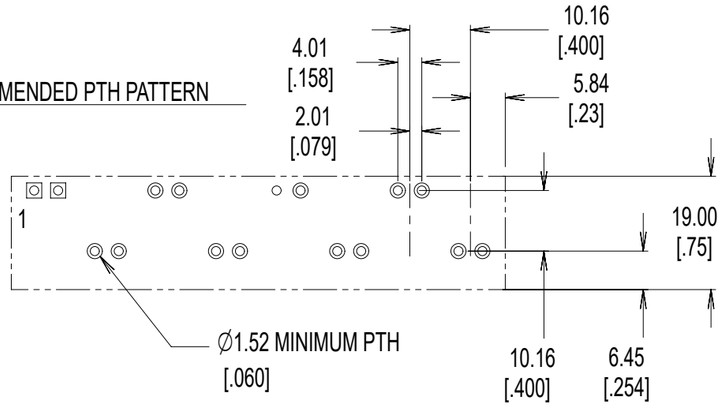

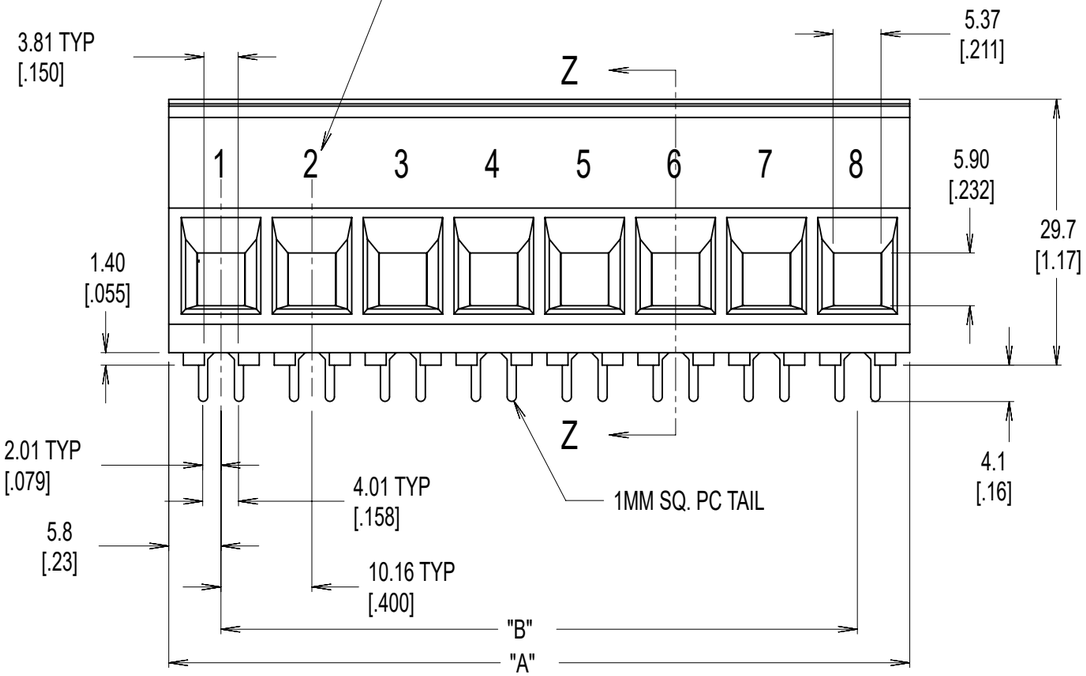

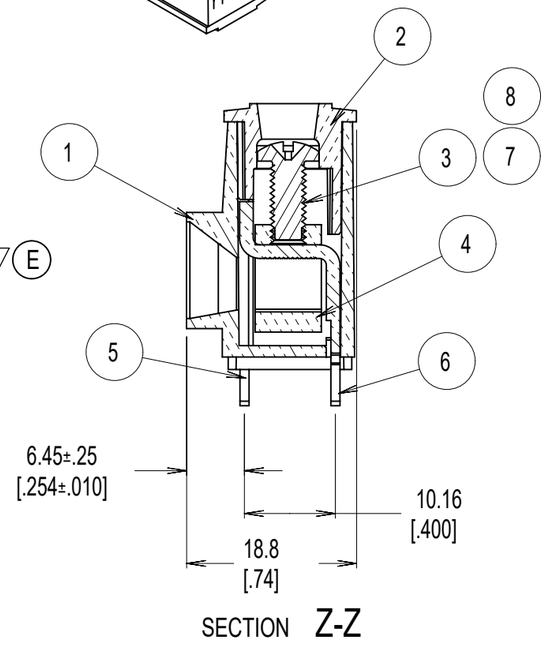

SECTION Z-Z

NOTES:

1. MATERIAL: SEE TABLE
2. FINISHES: SEE TABLE
3. PART IS DESIGNED TO MEET UL 1059 CLASS C 600V, 60A
4. STAGGERED PC TAIL POSITION ON ALTERNATE CIRCUITS
5. "XX" REFERS TO NUMBER OF CIRCUITS
6. FOR OPTIONAL IMPRINTING, REFER TO SD-38120-005.
7. ASSEMBLY IS ROHS COMPLIANT BY EXEMPTION.
   COMPONENTES MARKED WITH AN ASTERISK (*) ARE ROHS
   COMPLIANT BY EXEMPTION, ALL OTHER ARE ROHS COMPLIANT.

ITEM	QTY.	DESCRIPTION	MATERIAL	FINISH
8	XX	SCREW, M4 X 0.7 POZI-SLOT	ST. STEEL	PASSIVATED
7	XX	SCREW, M4 X 0.7 SLOTTED	BRONZE	TIN
6	A/R	REAR TERMINAL	COPPER	TIN
5	A/R	FRONT TERMINAL	COPPER	TIN
4	XX	CAGE (*)	BRASS	NICKEL
3	XX	SCREW, M4 X 0.7 POZI-SLOT	BRONZE	TIN
2	1	COVER	THERMOPLASTIC	BLACK
1	1	BODY	THERMOPLASTIC	BLACK

THIS DRAWING CONTAINS INFORMATION THAT IS PROPRIETARY TO MOLEX ELECTRONIC TECHNOLOGIES, LLC AND SHOULD NOT BE USED WITHOUT WRITTEN PERMISSION

DIMENSION UNITS	SCALE
mm/IN	3:2

GENERAL TOLERANCES (UNLESS SPECIFIED)

	MM	INCH
4 PLACES	±	±
3 PLACES	±	± 0.005
2 PLACES	± 0.13	± 0.01
1 PLACE	± 0.3	±
0 PLACES	±	±
ANGULAR TOL	± 2.0 °	

DRAFT WHERE APPLICABLE MUST REMAIN WITHIN DIMENSIONS

CURRENT REV DESC: REMOVED OBSOLETED PART NUMBERS AS PER PCN#514486.

EC NO:	774109	
DRWN:	RAVINR1	2023/12/25
CHK'D:	GGA	2024/01/29
APPR:	GGA	2024/01/29
INITIAL REVISION:		
DRWN:	GHR	2000/09/13
APPR:	L.ROTHAUS	2002/09/27

THIRD ANGLE PROJECTION | DRAWING: B-SIZE | SERIES: 39910

molex

SR BTS 6 AWG, 600V 60A

PRODUCT CUSTOMER DRAWING

DOCUMENT NUMBER	DOC TYPE	DOC PART	REVISION
SD-39910-001	PSD	001	E1

MATERIAL NUMBER	CUSTOMER	SHEET NUMBER
SEE CHART	GENERAL MARKET	1 OF 2

DOCUMENT STATUS	P1	RELEASE DATE	2024/01/29 05:14:14

FORMAT: Eng-lega-master-tb-prod-B
REVISION: E1
DATE: 2021/05/01

NO. OF CIRCUITS	DIM. "A"		DIM. "B"		MATERIAL NUMBER						
					STANDARD	OPTIONAL 10A IMPRINT	OPTIONAL 11A IMPRINT	OPTIONAL SLOTTED SCREW	OPTIONAL SLOTTED SCREW W/10A IMPRINT	OPTIONAL SLOTTED SCREW W/11A IMPRINT	OPTIONAL STAINLESS STEEL SCREW
	mm	in	mm	in							
2	21.8	0.86	10.16	0.4	399100102	399120102	399130102	399100402	399120402	399130402	399100702
3	32	1.26	20.32	0.8	399100103	399120103	399130103	399100403	399120403	399130403	399100703
4	42.2	1.66	30.48	1.2	399100104	399120104	399130104	-----	399120404	399130404	399100704
5	52.3	2.06	40.64	1.6	399100105	399120105	399130105	399100405	399120405	399130405	399100705
6	62.5	2.46	50.8	2	399100106	399120106	399130106	399100406	399120406	399130406	399100706
7	72.6	2.86	60.96	2.4	399100107	399120107	399130107	399100407	399120407	399130407	399100707
8	82.8	3.26	71.12	2.8	399100108	399120108	399130108	399100408	399120408	399130408	399100708
9	93	3.66	81.28	3.2	399100109	399120109	399130109	399100409	399120409	399130409	399100709
10	103.1	4.06	91.44	3.6	399100110	399120110	399130110	399100410	399120410	399130410	399100710
11	113.3	4.46	101.6	4	-----	399120111	399130111	399100411	399120411	399130411	399100711
12	123.4	4.86	111.76	4.4	399100112	399120112	399130112	399100412	399120412	399130412	399100712
13	133.6	5.26	121.92	4.8	399100113	399120113	399130113	399100413	399120413	399130413	399100713
14	143.8	5.66	132.08	5.2	399100114	399120114	399130114	399100414	399120414	399130414	399100714

THIS DRAWING CONTAINS INFORMATION THAT IS PROPRIETARY TO MOLEX ELECTRONIC TECHNOLOGIES, LLC AND SHOULD NOT BE USED WITHOUT WRITTEN PERMISSION

DIMENSION UNITS: mm/IN | SCALE: 3:2

GENERAL TOLERANCES (UNLESS SPECIFIED)

	MM	INCH
4 PLACES	±	±
3 PLACES	±	± 0.005
2 PLACES	± 0.13	± 0.01
1 PLACE	± 0.3	±
0 PLACES	±	±
ANGULAR TOL	± 2.0 °	

DRAFT WHERE APPLICABLE MUST REMAIN WITHIN DIMENSIONS

CURRENT REV DESC: REMOVED OBSOLETED PART NUMBERS AS PER PCN#514486.

EC NO: 774109
DRWN: RAVINR1 2023/12/25
CHK'D: GGA 2024/01/29
APPR: GGA 2024/01/29

INITIAL REVISION:
DRWN: GHR 2000/09/13
APPR: L.ROTHAUS 2002/09/27

THIRD ANGLE PROJECTION | DRAWING: B-SIZE | SERIES: 39910

molex

SR BTS 6 AWG, 600V 60A

PRODUCT CUSTOMER DRAWING

DOCUMENT NUMBER	DOC TYPE	DOC PART	REVISION
SD-39910-001	PSD	001	E1

MATERIAL NUMBER	CUSTOMER	SHEET NUMBER
SEE CHART	GENERAL MARKET	2 OF 2

DOCUMENT STATUS	P1	RELEASE DATE	2024/01/29 05:14:14

FORMAT: Eng-lega-master-tb-prod-B
REVISION: E1
DATE: 2021/05/01