CKTS	DIM A	DIM B
2	.200/5.08	.100/2.54
3	.300/7.62	.200/5.08
4	.400/10.16	.300/7.62
5	.500/12.70	.400/10.16
6	.600/15.24	.500/12.70
7	.700/17.78	.600/15.24
8	.800/20.32	.700/17.78
9	.900/22.86	.800/20.32
10	1.000/25.40	.900/22.86
11	1.100/27.94	1.000/25.40
12	1.200/30.48	1.100/27.94
13	1.300/33.02	1.200/30.48
14	1.400/35.56	1.300/33.02
15	1.500/38.10	1.400/35.56
16	1.600/40.64	1.500/38.10
17	1.700/43.18	1.600/40.64
18	1.800/45.72	1.700/43.18
19	1.900/48.26	1.800/45.72
20	2.000/50.80	1.900/48.26
21	2.100/53.34	2.000/50.80
22	2.200/55.88	2.100/53.34
23	2.300/58.42	2.200/55.88
24	2.400/60.96	2.300/58.42
25	2.500/63.50	2.400/60.96
26	2.600/66.04	2.500/63.50
27	2.700/68.58	2.600/66.04
28	2.800/71.12	2.700/68.58
29	2.900/73.66	2.800/71.12
30	3.000/76.20	2.900/73.66
31	3.100/78.74	3.000/76.20
32	3.200/81.28	3.100/78.74
33	3.300/83.82	3.200/81.28
34	3.400/86.36	3.300/83.82
35	3.500/88.90	3.400/86.36
36	3.600/91.44	3.500/88.90

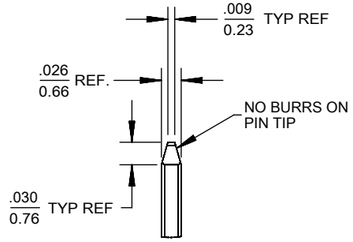

DETAIL X
SCALE 5:1
SEE NOTE 11

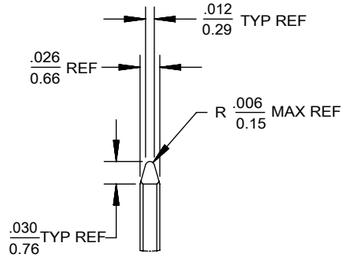

DETAIL Y
SCALE 5:1
SEE NOTE 11

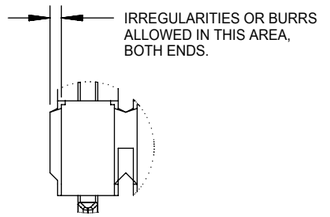

DETAIL Z
SCALE 5:1

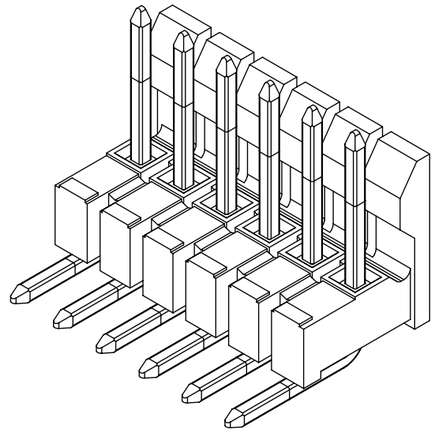

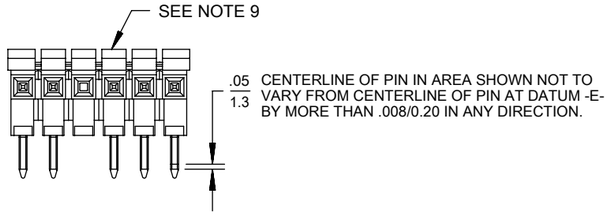

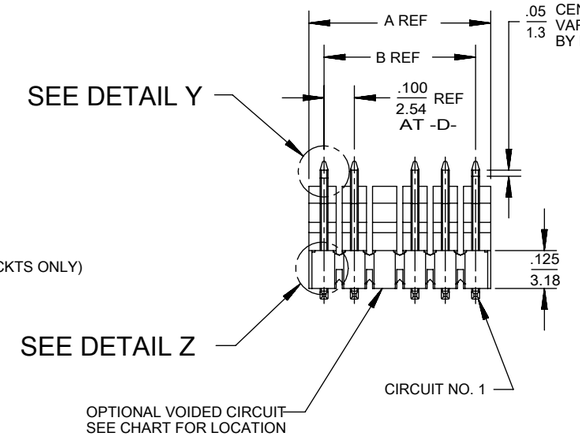

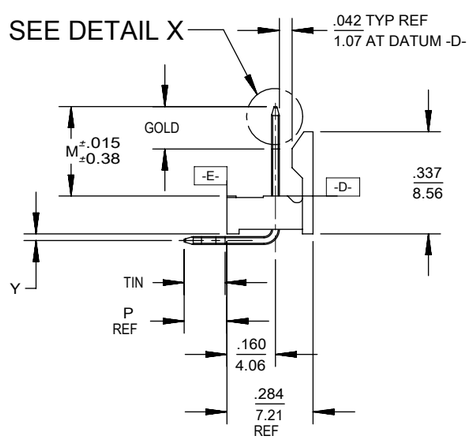

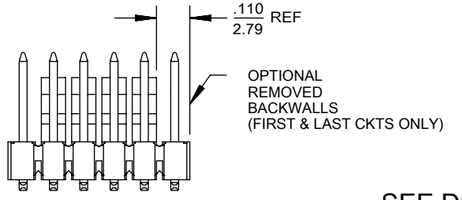

REMOVED BACKWALLS OPTION
SEE NOTE 12

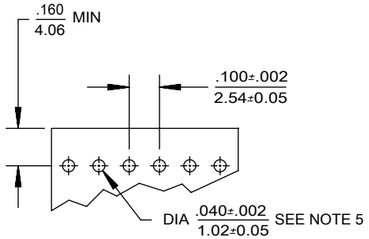

RECOMMENDED PC BOARD LAYOUT

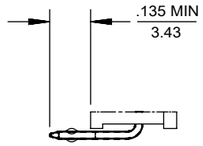

KINKED PIN OPTION
SEE NOTE 5

NOTES:
1. HEADER MATERIAL: GLASS FILLED NYLON, 94V-0, COLOR: BLACK
   PIN MATERIAL: BRASS
2. FINISH:
   (154) OVERALL TIN: .000100/0.00254 MIN,
   OVER .000050/0.00127 MIN NICKEL.
   (208) SELECT GOLD: .000015/0.00038 MIN,
   SELECT TIN: .000100/0.00254 MIN,
   OVERALL NICKEL UNDERPLATE: .000050/0.00127 MIN.
   (228) SELECT GOLD: .000030/0.00076 MIN,
   SELECT TIN: .000100/0.00254 MIN,
   OVERALL NICKEL UNDERPLATE: .000050/0.00127 MIN.
3. PRODUCT SPECIFICATION: PS-10-07
4. PACKAGING INFORMATION: SEE TABLES
5. KINK PIN OPTION NOT RECOMMENDED FOR 2 CIRCUIT PARTS.
   HOLE SIZE MAY NEED TO BE ADJUSTED ON 2 CIRCUIT PARTS
   WITH KINK OPTION FOR PROPER INSERTION INTO THE PCB. SEE
   SMES-42003 FOR ADDITIONAL INFORMATION ON KINK PIN DIRECTION
   AND PLACEMENT.
6. HEADERS ARE NOT STACKABLE ON .100/2.54 CENTERS.
7. SOLDERABILITY PER SMES-152.
8. PIN PUSH OUT FORCE: 3 LBS. MIN.
9. ABRASION MARKS ON BACK WALL SURFACE ARE PERMISSIBLE.
10. PARTS CONFORM TO CLASS 'B' REQUIREMENTS OF COSMETIC
    SPECIFICATION PS-45499-002.
11. PIN TIP DIMENSIONS ARE SHOWN FOR REFERENCE ONLY.
    DIMENSIONS APPLY PRIOR TO PLATING OR ASSEMBLY.
12. FIRST AND LAST CIRCUIT BACKWALLS MUST BE REMOVED WHEN
    MATING TO A PART WITH POLARIZING RIBS.
13. TEXT ON PART IS FOR REFERENCE ONLY. TEXT AND
    TEXT LOCATION MAY VARY DEPENDING ON PART
    NUMBER AND/OR TOOL.

THIS DRAWING CONTAINS INFORMATION THAT IS PROPRIETARY TO MOLEX ELECTRONIC TECHNOLOGIES, LLC AND SHOULD NOT BE USED WITHOUT WRITTEN PERMISSION

DIMENSION UNITS: INCH/MM	SCALE: 2:1	CURRENT REV DESC: PIN MATERIAL WAS INCLUDED	molex
GENERAL TOLERANCES (UNLESS SPECIFIED)	MM / INCH	EC NO: 819392	.100 FRICTION LOCK BREAKAWAY HEADER ASSY
4 PLACES	± / ±	DRWN: VKAMAK 2025/04/15	
3 PLACES	± / ± 0.01	CHK'D: VKAMAK 2025/04/17	PRODUCT CUSTOMER DRAWING
2 PLACES	± 0.25 / ± 0.014	APPR: SMURUGESAN 2025/04/17	
1 PLACE	± 0.36 / ±	INITIAL REVISION:	DOCUMENT NUMBER: SD-42228-001 | DOC TYPE: PSD | DOC PART: 001 | REVISION: L11
0 PLACES	± / ±	DRWN: JSCHAFER 2004/03/18	
ANGULAR TOL	± 0.5 °	APPR: MARGULIS 2004/03/08	
DRAFT WHERE APPLICABLE MUST REMAIN WITHIN DIMENSIONS		THIRD ANGLE PROJECTION	DRAWING: B-SIZE | SERIES: 42228 | MATERIAL NUMBER: SEE TABLE | CUSTOMER: GENERAL MARKET | SHEET NUMBER: 1 OF 5

DOCUMENT STATUS	P1	RELEASE DATE	2025/04/17 07:38:18

FORMAT: Eng-lega-master-tb-prod-B
REVISION: E1
DATE: 2021/05/01

A-42228-0002/0036	
HEADER NUMBER:	41411
PIN NUMBER:	154
PIN LENGTH: L	.705/17.91
MATING LENGTH: M	.295/7.49
GOLD POINT: G	N/A
PC TAIL LENGTH: P	.120/3.05
TIN: T	OVERALL
DIMENSION Y	.022/0.56
CKTS:	2-36
KINKS:	NO
REMOVED BACKWALLS:	NO
VOIDED CKTS:	NONE
PACKAGING:	BULK, PER PK-40873-0056

CKTS	MATERIAL NUMBER	ENG NUMBER	CKTS	MATERIAL NUMBER	ENG NUMBER
02			20	22-28-1200	A-42228-0020
03			21	22-28-1210	A-42228-0021
04			22	22-28-1220	A-42228-0022
05	22-28-1050	A-42228-0005	23	22-28-1230	A-42228-0023
06			24	22-28-1240	A-42228-0024
07	22-28-1070	A-42228-0007	25	22-28-1250	A-42228-0025
08	22-28-1080	A-42228-0008	26	22-28-1260	A-42228-0026
09	22-28-1090	A-42228-0009	27	22-28-1270	A-42228-0027
10	22-28-1100	A-42228-0010	28	22-28-1280	A-42228-0028
11	22-28-1110	A-42228-0011	29	22-28-1290	A-42228-0029
12	22-28-1120	A-42228-0012	30	22-28-1300	A-42228-0030
13	22-28-1130	A-42228-0013	31	22-28-1310	A-42228-0031
14			32	22-28-1320	A-42228-0032
15	22-28-1150	A-42228-0015	33	22-28-1330	A-42228-0033
16	22-28-1160	A-42228-0016	34	22-28-1340	A-42228-0034
17	22-28-1170	A-42228-0017	35	22-28-1350	A-42228-0035
18	22-28-1180	A-42228-0018	36		
19	22-28-1190	A-42228-0019			

A-42228-0037/0071	
HEADER NUMBER:	41411
PIN NUMBER:	208
PIN LENGTH: L	.705/17.91
MATING LENGTH: M	.295/7.49
GOLD POINT: G	.140/3.56
PC TAIL LENGTH: P	.120/3.05
TIN: T	.135/3.43
DIMENSION Y	.022/0.56
CKTS:	2-36
KINKS:	NO
REMOVED BACKWALLS:	NO
VOIDED CKTS:	NONE
PACKAGING:	BULK, PER PK-40873-0056

CKTS	MATERIAL NUMBER	ENG NUMBER	CKTS	MATERIAL NUMBER	ENG NUMBER
02			20	22-28-1201	A-42228-0055
03	22-28-1031	A-42228-0038	21	22-28-1211	A-42228-0056
04			22	22-28-1221	A-42228-0057
05	22-28-1051	A-42228-0040	23	22-28-1231	A-42228-0058
06	22-28-1061	A-42228-0041	24	22-28-1241	A-42228-0059
07			25	22-28-1251	A-42228-0060
08	22-28-1081	A-42228-0043	26	22-28-1261	A-42228-0061
09			27	22-28-1271	A-42228-0062
10			28	22-28-1281	A-42228-0063
11	22-28-1111	A-42228-0046	29	22-28-1291	A-42228-0064
12	22-28-1121	A-42228-0047	30	22-28-1301	A-42228-0065
13	22-28-1131	A-42228-0048	31	22-28-1311	A-42228-0066
14	22-28-1141	A-42228-0049	32	22-28-1321	A-42228-0067
15	22-28-1151	A-42228-0050	33	22-28-1332	A-42228-0068
16	22-28-1161	A-42228-0051	34	22-28-1341	A-42228-0069
17	22-28-1171	A-42228-0052	35	22-28-1351	A-42228-0070
18	22-28-1181	A-42228-0053	36		
19	22-28-1191	A-42228-0054			

THIS DRAWING CONTAINS INFORMATION THAT IS PROPRIETARY TO MOLEX ELECTRONIC TECHNOLOGIES, LLC AND SHOULD NOT BE USED WITHOUT WRITTEN PERMISSION

DIMENSION UNITS: INCH/MM | SCALE: 1:1

GENERAL TOLERANCES (UNLESS SPECIFIED)

	MM	INCH
4 PLACES	±	±
3 PLACES	±	± 0.01
2 PLACES	± 0.25	± 0.014
1 PLACE	± 0.36	±
0 PLACES	±	±
ANGULAR TOL	± 0.5 °	

DRAFT WHERE APPLICABLE MUST REMAIN WITHIN DIMENSIONS

CURRENT REV DESC: PIN MATERIAL WAS INCLUDED

EC NO: 819392
DRWN: VKAMAK 2025/04/15
CHK'D: VKAMAK 2025/04/17
APPR: SMURUGESAN 2025/04/17

INITIAL REVISION:
DRWN: JSCHAFER 2004/03/18
APPR: MARGULIS 2004/03/08

THIRD ANGLE PROJECTION | DRAWING: B-SIZE | SERIES: 42228

molex

.100 FRICTION LOCK BREAKAWAY HEADER ASSY

PRODUCT CUSTOMER DRAWING

DOCUMENT NUMBER	DOC TYPE	DOC PART	REVISION
SD-42228-001	PSD	001	L11

MATERIAL NUMBER	CUSTOMER	SHEET NUMBER
SEE TABLE	GENERAL MARKET	2 OF 5

DOCUMENT STATUS	P1	RELEASE DATE	2025/04/17 07:38:18

FORMAT: Eng-lega-master-tb-prod-B
REVISION: E1
DATE: 2021/05/01

A-42228-0072/0106	
HEADER NUMBER:	41411
PIN NUMBER:	228
PIN LENGTH: L	.705/17.91
MATING LENGTH: M	.295/7.49
GOLD POINT: G	.140/3.56
PC TAIL LENGTH: P	.120/3.05
TIN: T	.135/3.43
DIMENSION Y	.022/0.56
CKTS:	2-36
KINKS:	NO
REMOVED BACKWALLS:	NO
VOIDED CKTS:	NONE
PACKAGING:	BULK, PER PK-40873-0056

CKTS	MATERIAL NUMBER	ENG NUMBER	CKTS	MATERIAL NUMBER	ENG NUMBER
02			20	22-28-1202	A-42228-0090
03	22-28-1032	A-42228-0073	21	22-28-1212	A-42228-0091
04	22-28-1042	A-42228-0074	22	22-28-1222	A-42228-0092
05	22-28-1052	A-42228-0075	23	22-28-1232	A-42228-0093
06	22-28-1062	A-42228-0076	24	22-28-1242	A-42228-0094
07	22-28-1072	A-42228-0077	25	22-28-1252	A-42228-0095
08	22-28-1082	A-42228-0078	26	22-28-1262	A-42228-0096
09	22-28-1092	A-42228-0079	27	22-28-1272	A-42228-0097
10	22-28-1102	A-42228-0080	28	22-28-1282	A-42228-0098
11	22-28-1112	A-42228-0081	29	22-28-1292	A-42228-0099
12	22-28-1122	A-42228-0082	30	22-28-1302	A-42228-0100
13	22-28-1132	A-42228-0083	31	22-28-1312	A-42228-0101
14	22-28-1142	A-42228-0084	32	22-28-1322	A-42228-0102
15	22-28-1152	A-42228-0085	33	22-28-1332	A-42228-0103
16	22-28-1162	A-42228-0086	34	22-28-1342	A-42228-0104
17	22-28-1172	A-42228-0087	35	22-28-1352	A-42228-0105
18	22-28-1182	A-42228-0088	36	22-28-1362	A-42228-0106
19	22-28-1192	A-42228-0089			

A-42228-0107/0141	
HEADER NUMBER:	41411
PIN NUMBER:	154
PIN LENGTH: L	.720/18.29
MATING LENGTH: M	.295/7.49
GOLD POINT: G	N/A
PC TAIL LENGTH: P	.135/3.43
TIN: T	OVERALL
DIMENSION Y	.022/0.56
CKTS:	2-36
KINKS:	YES SMES-42003
REMOVED BACKWALLS:	NO
VOIDED CKTS:	NONE
PACKAGING:	BULK, PER PK-40873-0056

CKTS	MATERIAL NUMBER	ENG NUMBER	CKTS	MATERIAL NUMBER	ENG NUMBER
02			20	22-28-1203	A-42228-0125
03	22-28-1033	A-42228-0108	21	22-28-1213	A-42228-0126
04	22-28-1043	A-42228-0109	22	22-28-1223	A-42228-0127
05			23	22-28-1233	A-42228-0128
06	22-28-1063	A-42228-0111	24	22-28-1243	A-42228-0129
07	22-28-1073	A-42228-0112	25	22-28-1253	A-42228-0130
08	22-28-1083	A-42228-0113	26	22-28-1263	A-42228-0131
09	22-28-1093	A-42228-0114	27	22-28-1273	A-42228-0132
10	22-28-1103	A-42228-0115	28	22-28-1283	A-42228-0133
11	22-28-1113	A-42228-0116	29	22-28-1293	A-42228-0134
12	22-28-1123	A-42228-0117	30	22-28-1303	A-42228-0135
13	22-28-1133	A-42228-0118	31	22-28-1313	A-42228-0136
14	22-28-1143	A-42228-0119	32	22-28-1323	A-42228-0137
15	22-28-1153	A-42228-0120	33	22-28-1333	A-42228-0138
16	22-28-1163	A-42228-0121	34	22-28-1343	A-42228-0139
17	22-28-1173	A-42228-0122	35	22-28-1353	A-42228-0140
18	22-28-1183	A-42228-0123	36	22-28-1363	A-42228-0141
19	22-28-1193	A-42228-0124			

THIS DRAWING CONTAINS INFORMATION THAT IS PROPRIETARY TO MOLEX ELECTRONIC TECHNOLOGIES, LLC AND SHOULD NOT BE USED WITHOUT WRITTEN PERMISSION

DIMENSION UNITS: INCH/MM | SCALE: 1:1

GENERAL TOLERANCES (UNLESS SPECIFIED)

	MM	INCH
4 PLACES	±	±
3 PLACES	±	± 0.01
2 PLACES	± 0.25	± 0.014
1 PLACE	± 0.36	±
0 PLACES	±	±
ANGULAR TOL	± 0.5 °	

DRAFT WHERE APPLICABLE MUST REMAIN WITHIN DIMENSIONS

CURRENT REV DESC: PIN MATERIAL WAS INCLUDED

EC NO: 819392
DRWN: VKAMAK 2025/04/15
CHK'D: VKAMAK 2025/04/17
APPR: SMURUGESAN 2025/04/17

INITIAL REVISION:
DRWN: JSCHAFER 2004/03/18
APPR: MARGULIS 2004/03/08

THIRD ANGLE PROJECTION | DRAWING: B-SIZE | SERIES: 42228

molex

.100 FRICTION LOCK
BREAKAWAY HEADER ASSY

PRODUCT CUSTOMER DRAWING

DOCUMENT NUMBER	DOC TYPE	DOC PART	REVISION
SD-42228-001	PSD	001	L11

MATERIAL NUMBER	CUSTOMER	SHEET NUMBER
SEE TABLE	GENERAL MARKET	3 OF 5

DOCUMENT STATUS	P1	RELEASE DATE	2025/04/17 07:38:18

FORMAT: Eng-lega-master-tb-prod-B
REVISION: E1
DATE: 2021/05/01

A-42228-0142/0176	
HEADER NUMBER:	41411
PIN NUMBER:	208
PIN LENGTH: L	.720/18.29
MATING LENGTH: M	.295/7.49
GOLD POINT: G	.140/3.56
PC TAIL LENGTH: P	.135/3.43
TIN: T	.135/3.43
DIMENSION Y	.022/0.56
CKTS:	2-36
KINKS:	YES SMES-42003
REMOVED BACKWALLS:	NO
VOIDED CKTS:	NONE
PACKAGING:	BULK, PER PK-40873-0056

CKTS	MATERIAL NUMBER	ENG NUMBER	CKTS	MATERIAL NUMBER	ENG NUMBER
02	22-28-1024	A-42228-0142	20	22-28-1204	A-42228-0160
03	22-28-1034	A-42228-0143	21	22-28-1214	A-42228-0161
04	22-28-1044	A-42228-0144	22	22-28-1224	A-42228-0162
05	22-28-1054	A-42228-0145	23	22-28-1234	A-42228-0163
06	22-28-1064	A-42228-0146	24	22-28-1244	A-42228-0164
07	22-28-1074	A-42228-0147	25	22-28-1254	A-42228-0165
08	22-28-1084	A-42228-0148	26	22-28-1264	A-42228-0166
09	22-28-1094	A-42228-0149	27	22-28-1274	A-42228-0167
10	22-28-1104	A-42228-0150	28	22-28-1284	A-42228-0168
11	22-28-1114	A-42228-0151	29	22-28-1294	A-42228-0169
12	22-28-1124	A-42228-0152	30	22-28-1304	A-42228-0170
13	22-28-1134	A-42228-0153	31	22-28-1314	A-42228-0171
14	22-28-1144	A-42228-0154	32	22-28-1324	A-42228-0172
15	22-28-1154	A-42228-0155	33	22-28-1334	A-42228-0173
16	22-28-1164	A-42228-0156	34	22-28-1344	A-42228-0174
17	22-28-1174	A-42228-0157	35	22-28-1354	A-42228-0175
18	22-28-1184	A-42228-0158	36	22-28-1364	A-42228-0176
19	22-28-1194	A-42228-0159			

A-42228-0177/0211	
HEADER NUMBER:	41411
PIN NUMBER:	228
PIN LENGTH: L	.720/18.29
MATING LENGTH: M	.295/7.49
GOLD POINT: G	.140/3.56
PC TAIL LENGTH: P	.135/3.43
TIN: T	.135/3.43
DIMENSION Y	.022/0.56
CKTS:	2-36
KINKS:	YES SMES-42003
REMOVED BACKWALLS:	NO
VOIDED CKTS:	NONE
PACKAGING:	BULK, PER PK-40873-0056

CKTS	MATERIAL NUMBER	ENG NUMBER	CKTS	MATERIAL NUMBER	ENG NUMBER
02	22-28-1025	A-42228-0177	20	22-28-1205	A-42228-0195
03	22-28-1035	A-42228-0178	21	22-28-1215	A-42228-0196
04	22-28-1045	A-42228-0179	22	22-28-1225	A-42228-0197
05	22-28-1055	A-42228-0180	23	22-28-1235	A-42228-0198
06	22-28-1065	A-42228-0181	24	22-28-1245	A-42228-0199
07	22-28-1075	A-42228-0182	25	22-28-1255	A-42228-0200
08	22-28-1085	A-42228-0183	26	22-28-1265	A-42228-0201
09	22-28-1095	A-42228-0184	27	22-28-1275	A-42228-0202
10	22-28-1105	A-42228-0185	28	22-28-1285	A-42228-0203
11	22-28-1115	A-42228-0186	29	22-28-1295	A-42228-0204
12	22-28-1125	A-42228-0187	30	22-28-1305	A-42228-0205
13	22-28-1135	A-42228-0188	31	22-28-1315	A-42228-0206
14	22-28-1145	A-42228-0189	32	22-28-1325	A-42228-0207
15	22-28-1155	A-42228-0190	33	22-28-1335	A-42228-0208
16			34	22-28-1345	A-42228-0209
17	22-28-1175	A-42228-0192	35	22-28-1355	A-42228-0210
18	22-28-1185	A-42228-0193	36	22-28-1365	A-42228-0211
19	22-28-1195	A-42228-0194			

THIS DRAWING CONTAINS INFORMATION THAT IS PROPRIETARY TO MOLEX ELECTRONIC TECHNOLOGIES, LLC AND SHOULD NOT BE USED WITHOUT WRITTEN PERMISSION

DIMENSION UNITS: INCH/MM | SCALE: 1:1

GENERAL TOLERANCES (UNLESS SPECIFIED)

	MM	INCH
4 PLACES	±	±
3 PLACES	±	± 0.01
2 PLACES	± 0.25	± 0.014
1 PLACE	± 0.36	±
0 PLACES	±	±
ANGULAR TOL	± 0.5 °	

DRAFT WHERE APPLICABLE MUST REMAIN WITHIN DIMENSIONS

CURRENT REV DESC: PIN MATERIAL WAS INCLUDED

EC NO: 819392
DRWN: VKAMAK 2025/04/15
CHK'D: VKAMAK 2025/04/17
APPR: SMURUGESAN 2025/04/17

INITIAL REVISION:
DRWN: JSCHAFER 2004/03/18
APPR: MARGULIS 2004/03/08

THIRD ANGLE PROJECTION | DRAWING: B-SIZE | SERIES: 42228

molex

.100 FRICTION LOCK
BREAKAWAY HEADER ASSY

PRODUCT CUSTOMER DRAWING

DOCUMENT NUMBER	DOC TYPE	DOC PART	REVISION
SD-42228-001	PSD	001	L11

MATERIAL NUMBER	CUSTOMER	SHEET NUMBER
SEE TABLE	GENERAL MARKET	4 OF 5

DOCUMENT STATUS	P1	RELEASE DATE	2025/04/17 07:38:18

FORMAT: Eng-lega-master-tb-prod-B
REVISION: E1
DATE: 2021/05/01

42228-0212/0246	
HEADER NUMBER:	41411
PIN NUMBER:	154
PIN LENGTH: L	.705/17.91
MATING LENGTH: M	.295/7.49
GOLD POINT: G	N/A
PC TAIL LENGTH: P	.120/3.05
TIN: T	OVERALL
DIMENSION Y	.022/0.56
CKTS:	2-36
KINKS:	NO
REMOVED BACKWALLS:	NO
VOIDED CKTS:	NONE
PACKAGING:	TAPE AND REEL, 422281000-PK

CKTS	MATERIAL NUMBER	ENG NUMBER	CKTS	MATERIAL NUMBER	ENG NUMBER
02			20		
03	42228-0213	42228-0213	21		
04			22		
05			23		
06			24		
07			25		
08			26		
09			27		
10			28		
11			29		
12			30		
13			31		
14			32		
15			33		
16			34		
17			35		
18			36		
19					

THIS DRAWING CONTAINS INFORMATION THAT IS PROPRIETARY TO MOLEX ELECTRONIC TECHNOLOGIES, LLC AND SHOULD NOT BE USED WITHOUT WRITTEN PERMISSION

DIMENSION UNITS: INCH/MM | SCALE: 1:1

GENERAL TOLERANCES (UNLESS SPECIFIED)

	MM	INCH
4 PLACES	±	±
3 PLACES	±	± 0.01
2 PLACES	± 0.25	± 0.014
1 PLACE	± 0.36	±
0 PLACES	±	±
ANGULAR TOL	± 0.5 °	

DRAFT WHERE APPLICABLE MUST REMAIN WITHIN DIMENSIONS

CURRENT REV DESC: PIN MATERIAL WAS INCLUDED

EC NO: 819392
DRWN: VKAMAK 2025/04/15
CHK'D: VKAMAK 2025/04/17
APPR: SMURUGESAN 2025/04/17

INITIAL REVISION:
DRWN: JSCHAFER 2004/03/18
APPR: MARGULIS 2004/03/08

molex

.100 FRICTION LOCK
BREAKAWAY HEADER ASSY

PRODUCT CUSTOMER DRAWING

DOCUMENT NUMBER	DOC TYPE	DOC PART	REVISION
SD-42228-001	PSD	001	L11

THIRD ANGLE PROJECTION	DRAWING	SERIES	MATERIAL NUMBER	CUSTOMER	SHEET NUMBER
	B-SIZE	42228	SEE TABLE	GENERAL MARKET	5 OF 5

DOCUMENT STATUS	P1	RELEASE DATE	2025/04/17 07:38:18

FORMAT: Eng-lega-master-tb-prod-B
REVISION: E1
DATE: 2021/05/01