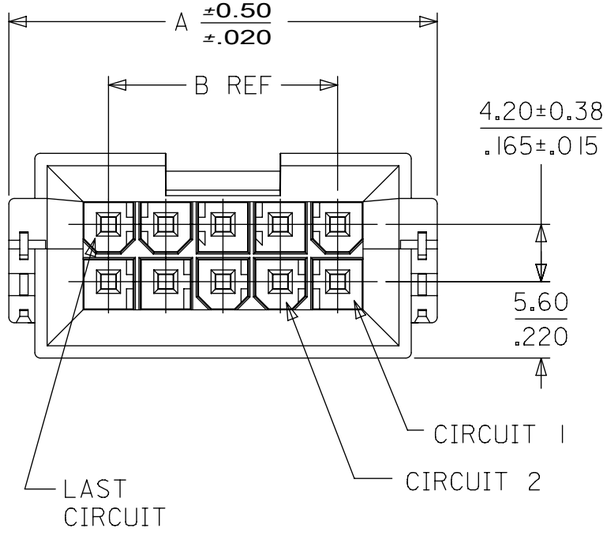

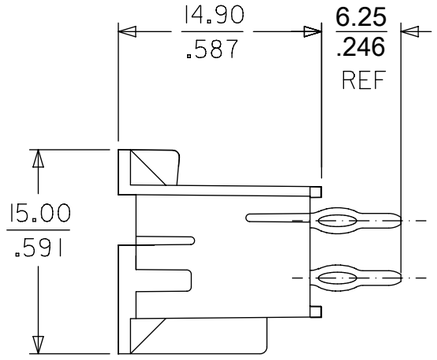

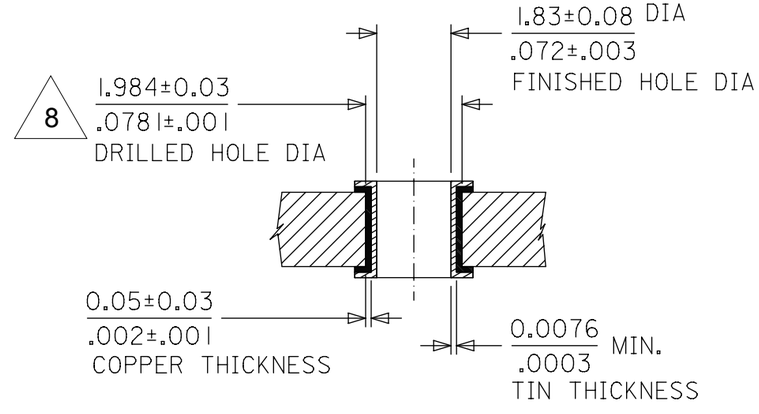

SECTION Z-Z

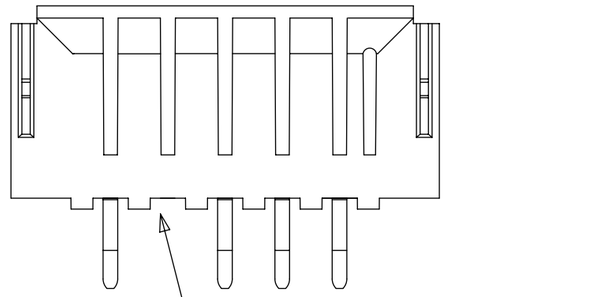

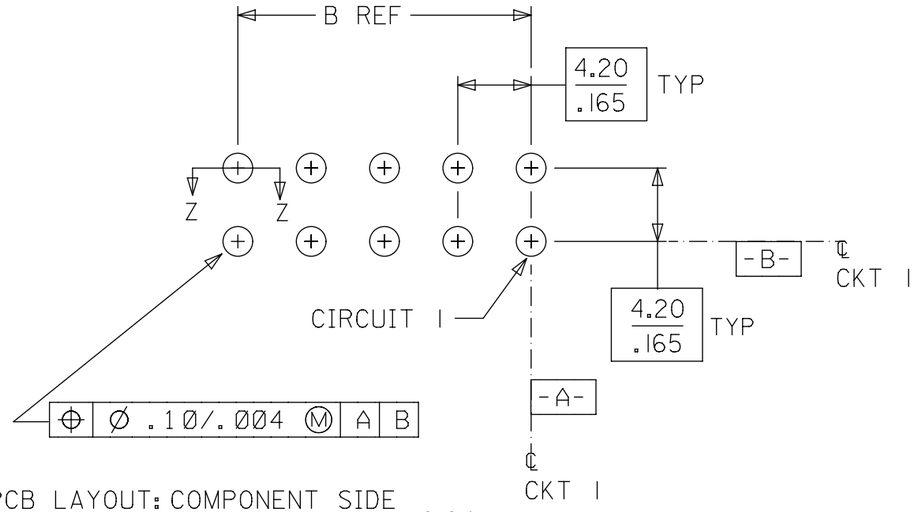

PCB LAYOUT: COMPONENT SIDE
RECOMMENDED PCB THICKNESS: 2.24 / .088 MIN.

CKT	A	B
4	18.80 / .740	4.20 / .165
6	23.00 / .906	8.40 / .331
8	27.20 / 1.071	12.60 / .496
10	31.40 / 1.237	16.80 / .661
12	35.60 / 1.402	21.00 / .827
14	39.80 / 1.567	25.20 / .992
16	44.00 / 1.733	29.40 / 1.157
18	48.20 / 1.898	33.60 / 1.323
20	52.40 / 2.063	37.80 / 1.488
22	56.60 / 2.229	42.00 / 1.654
24	60.80 / 2.394	46.20 / 1.819

NOTES:
1. MATERIAL:
   HOUSING: NYLON, GLASS FILLED, UL94V-0, COLOR: BLACK
   TERMINAL: PHOSPHOR BRONZE
2. FINISH: SEE SHEET 2
3. PRODUCT SPECIFICATION: PS-43879-001
4. PACKAGING: PK-43879-001
5. THIS PART MATES WITH RECEPTACLE NUMBERS 5557 AND 42474
6. THIS PART MATES WITH HEADER NUMBER 42385
7. PART ALLOWS FOR 1.27/.050 MAX. MIS-ALIGNMENT WITH MATING HOUSING IN ANY DIRECTION
8. DRILLED HOLE DIAMETER IS EQUIVALENT TO 5/64 INCH STANDARD DRILL BIT
9. CONNECTOR ASSEMBLIES ARE NOT DESIGNED TO BE MATED AND UNMATED WHILE CIRCUITS ARE LIVE
10. PART IS NOT DESIGNED FOR CURRENT SHARING
11. PART CONFORMS TO CLASS "B" OF COSMETIC SPECIFICATION PS-45499-002
12. THIS HEADER REQUIRES A MOLEX INSERTION TOOL (62200-9400) TO PROPERLY INSTALL IT TO THE PCB.

RELEASE STATUS		RELEASE DATE	

FORMAT: Eng-lega-master-tb-prod-B
REVISION: C
DATE: 2016/04/04

QUALITY SYMBOLS: FA = 0; FC = 0; FE = 0; ▼ = 0; C = 0; ☒ = 0; ■ = 0; C = 0

THIS DRAWING CONTAINS INFORMATION THAT IS PROPRIETARY TO MOLEX ELECTRONIC TECHNOLOGIES, LLC AND SHOULD NOT BE USED WITHOUT WRITTEN PERMISSION

CHG DIM 5.82 TO 6.25 2016/04/11
EC NO: 104170 2016/05/17
DRWN: CSLAFTER
CHK'D: FSMITH
APPR: FSMITH
REV: F10

GENERAL TOLERANCES (UNLESS SPECIFIED)

	MM	INCH
4 PLACES	±	±
3 PLACES	±	± 0.01
2 PLACES	± 0.25	± 0.014
1 PLACES	± 0.35	±
0 PLACES	±	±
ANGULAR TOL ± 0.5		

DRAFT WHERE APPLICABLE MUST REMAIN WITHIN DIMENSIONS

DIMENSION UNITS: MM/IN
SCALE: 2:1
DRWN BY: MANLAPAZ DATE: 1998/04/08
CHK'D BY: BANDURA DATE: 1998/04/08
APPR BY: FSMITH DATE: 2011/07/11
DRAWING SIZE: B
THIRD ANGLE PROJECTION

molex®

MINI-FIT JR
BMI/CPI HEADER ASSEMBLY WITH VOIDS

PRODUCT CUSTOMER DRAWING

SERIES	MATERIAL NUMBER	CUSTOMER
43879	SEE CHART	GENERAL MARKET

DOCUMENT NUMBER	DOC TYPE	DOC PART	SHEET NUMBER
SD-43879-041	PSD	000	1 OF 2

MATERIAL NO.	CKTS	VOIDED CKT	FINISH
43879-4000	6	1	1 - TIN OVER NICKEL
43879-4002	18	18	1 - TIN OVER NICKEL
43879-4003	18	7, 16	4 - GOLD & TIN OVER NICKEL
43879-			
43879-			
43879-			
43879-			
43879-			
43879-			

FINISH:

1 - .00254/.000100 MIN. BRIGHT TIN OVER .00127/.000050 MIN. NICKEL OVERALL.

4 - .00076/.000030 MIN. GOLD IN CONTACT AREA, .00254/.000100 MIN. MATTE TIN IN TAIL AREA, OVER .00127/.000050 MIN. NICKEL OVERALL.

QUALITY SYMBOLS

EA = 0
EC = 0
ED = 0
▼ = 0
C = 0
☒ = 0
■ = 0
E = 0

THIS DRAWING CONTAINS INFORMATION THAT IS PROPRIETARY TO MOLEX ELECTRONIC TECHNOLOGIES, LLC AND SHOULD NOT BE USED WITHOUT WRITTEN PERMISSION

CHG DIM 5.82 TO 6.25 2016/04/11
EC NO: 104170 2016/05/17
DRWN: CSLAFTER 2016/05/17
CHK'D: FSMITH
APPR: FSMITH

F10 REV

GENERAL TOLERANCES (UNLESS SPECIFIED)

	MM	INCH
4 PLACES	±	±
3 PLACES	±	± 0.01
2 PLACES	± 0.25	± 0.014
1 PLACES	± 0.35	±
0 PLACES	±	±

ANGULAR TOL ± 0.5

DRAFT WHERE APPLICABLE MUST REMAIN WITHIN DIMENSIONS

DIMENSION UNITS: INCH
SCALE: 2:1
DRWN BY: MANLAPAZ DATE: 1998/04/08
CHK'D BY: BANDURA DATE: 198/04/08
APPR BY: FSMITH DATE: 2011/07/11
DRAWING SIZE: B
THIRD ANGLE PROJECTION

molex®

MINI-FIT JR
BMI/CPI HEADER ASSEMBLY WITH VOIDS

PRODUCT CUSTOMER DRAWING

SERIES	MATERIAL NUMBER	CUSTOMER
43879	SEE CHART	GENERAL MARKET

DOCUMENT NUMBER	DOC TYPE	DOC PART	SHEET NUMBER
SD-43879-041	PSD	000	2 OF 2

RELEASE STATUS	P1	RELEASE DATE	2016/05/17 21:36:28

FORMAT: Eng-lega-master-tb-prod-B
REVISION: C
DATE: 2016/04/04